Curs 11

2023/2024

Dispozitive şi circuite de microunde pentru radiocomunicații

Disciplina 2023/2024

- 2C/1L (+1), **DCMR (CDM)**
- **Minim 7 prezente (curs+laborator)**
- Curs - **conf. Radu Damian**
  - Miercuri 08(**:15**)-17, ~~Online~~/**Video (istoric)**, P5
  - E – **50%** din nota
  - **probleme** + (2p prez. curs) + (3 teste) + (bonus activitate)
    - primul test L1: 04.10.2023 (t2 si t3 neanuntate la **curs**)
    - 3pz (C) ≈ +0.5p (**2p** max)
  - **toate materialele permise**

Disciplina 2023/2024

- 2C/1L, **DCMR (CDM)**
- Laborator – **conf. Radu Damian**
  - Miercuri/Joi/Vineri, par/impar, **II.13**
  - L – **25%** din nota
    - ADS, 4 sedinte aplicatii
    - prezenta + **rezultate personale!**
  - P – **25%** din nota
    - ADS, 3 sedinte aplicatii (-1? 21-22.12.2022)
    - tema personala

Cuprins

- Linii de transmisie
- Adaptarea de impedanța
- Cuploare direcționale
- Divizoare de putere
- Amplificatoare de microunde
- Filtre de microunde
- Oscilatoare de microunde ?

Bibliografie

- http://rf-opto.etti.tuiasi.ro
- Irinel Casian-Botez: "Microunde vol. 1: Proiectarea de circuit", Ed. TEHNOPRES, 2008
- **David Pozar, Microwave Engineering, Wiley; 4th edition , 2011, ISBN : 978-1-118-29813-8 (E), ISBN : 978-0-470-63155-3 (P)**

Examen: Reprezentare logaritmică

$dB = 10 \cdot \log_{10} (P_2 / P_1)$

0 dB	= 1
+ 0.1 dB	= 1.023 (+2.3%)
+ 3 dB	= 2
+ 5 dB	= 3
+ 10 dB	= 10
-3 dB	= 0.5
-10 dB	= 0.1
-20 dB	= 0.01
-30 dB	= 0.001

$dBm = 10 \cdot \log_{10} (P / 1\ mW)$

0 dBm	= 1 mW
3 dBm	= 2 mW
5 dBm	= 3 mW
10 dBm	= 10 mW
20 dBm	= 100 mW
-3 dBm	= 0.5 mW
-10 dBm	= 100 μW
-30 dBm	= 1 μW
-60 dBm	= 1 nW

[dBm] + [dB] = [dBm]

[dBm/Hz] + [dB] = [dBm/Hz]

[x] + [dB] = [x]

Linii de transmisie in mod TEM

Cuprins

- Linii de transmisie
- Adaptarea de impedanța
- Cuploare direcționale
- Divizoare de putere
- Amplificatoare de microunde
- Filtre de microunde
- Oscilatoare de microunde ?

Linie fara pierderi

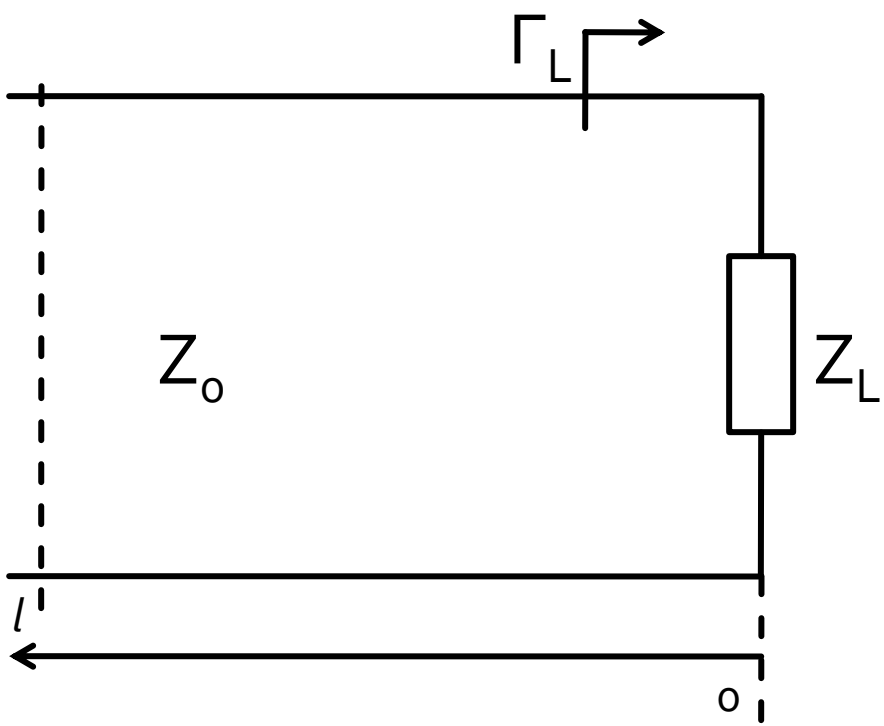

$$V(z) = V_0^+ e^{-j\cdot\beta\cdot z} + V_0^- e^{j\cdot\beta\cdot z}$$

$$I(z) = \frac{V_0^+}{Z_0} e^{-j\cdot\beta\cdot z} - \frac{V_0^-}{Z_0} e^{j\cdot\beta\cdot z}$$

$$Z_L = \frac{V(0)}{I(0)} \qquad Z_L = \frac{V_0^+ + V_0^-}{V_0^+ - V_0^-} \cdot Z_0$$

- coeficient de reflexie in tensiune

$$\boxed{\Gamma = \frac{V_0^-}{V_0^+} = \frac{Z_L - Z_0}{Z_L + Z_0}}$$

- Z_o real

Matricea S (repartitie)

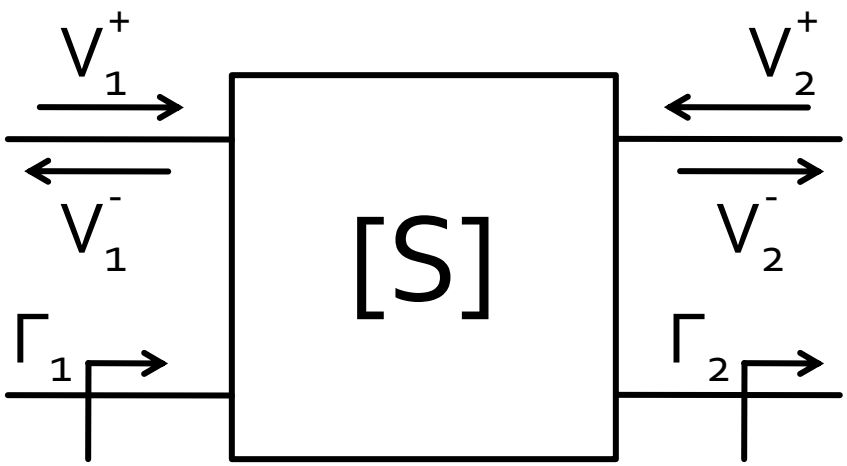

$$\begin{bmatrix} V_1^- \\ V_2^- \end{bmatrix} = \begin{bmatrix} S_{11} & S_{12} \\ S_{21} & S_{22} \end{bmatrix} \cdot \begin{bmatrix} V_1^+ \\ V_2^+ \end{bmatrix}$$

$$S_{11} = \left.\frac{V_1^-}{V_1^+}\right|_{V_2^+=0} = \Gamma_1\big|_{\Gamma_2=0}$$

$$S_{21} = \left.\frac{V_2^-}{V_1^+}\right|_{V_2^+=0} = T_{21}\big|_{\Gamma_2=0}$$

- S11 este coeficientul de reflexie la portul ***1*** cand cand portul ***2*** este terminat pe impedanta care realizeaza adaptarea
- S21 este coeficientul de transmisie de la portul ***1*** (**al doilea** indice**!**) la portul ***2*** (**primul** indice**!**) cand se depune semnal la portul ***1*** si portul ***2*** este terminat pe impedanta care realizeaza adaptarea

Matricea S (repartitie)

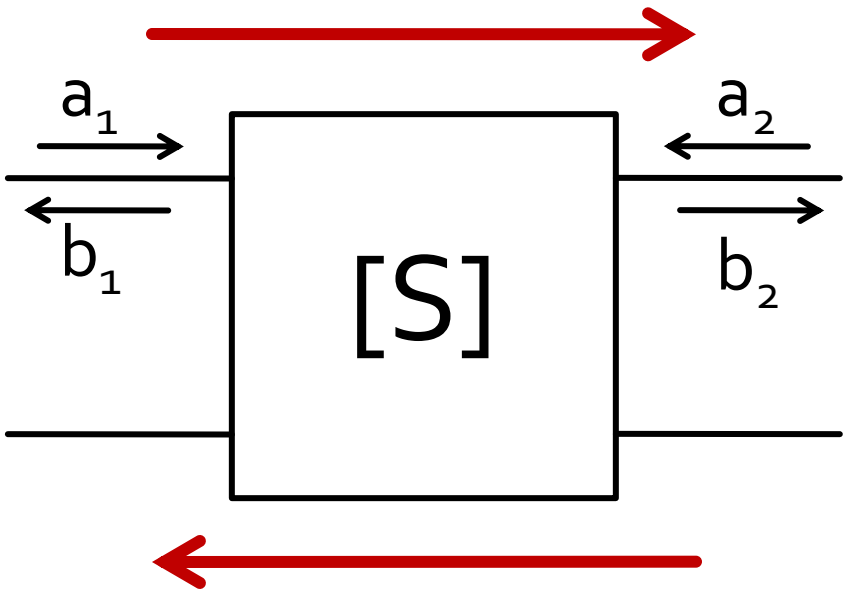

$$\begin{bmatrix} b_1 \\ b_2 \end{bmatrix} = \begin{bmatrix} S_{11} & S_{12} \\ S_{21} & S_{22} \end{bmatrix} \cdot \begin{bmatrix} a_1 \\ a_2 \end{bmatrix}$$

$$|S_{21}|^2 = \frac{Putere\ sarcina\ Z_0}{Putere\ sursa\ Z_0}$$

- a,b
  - informatia despre putere **SI** faza
- S_{ij}
  - influenta circuitului asupra puterii semnalului incluzand informatiile relativ la faza

Cuprins

- Linii de transmisie
- Adaptarea de impedanța
- Cuploare direcționale
- Divizoare de putere
- Amplificatoare de microunde
- Filtre de microunde
- Oscilatoare de microunde ?

Adaptare dpdv al puterii

$$Z_L = Z_i^*$$

Daca se alege un Zo real

$$\Gamma = \frac{Z - Z_0}{Z + Z_0}$$

$$\Gamma_L = \Gamma_i^*$$

- numere complexe
- in planul complex

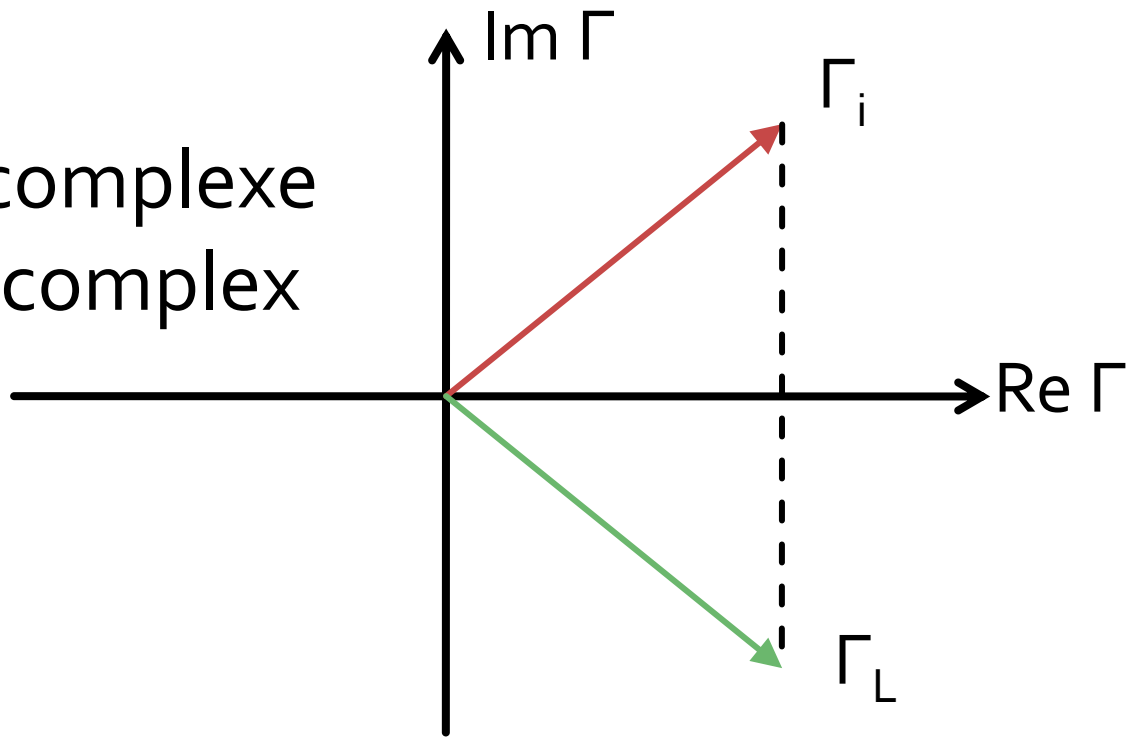

Reflexie de putere / Model

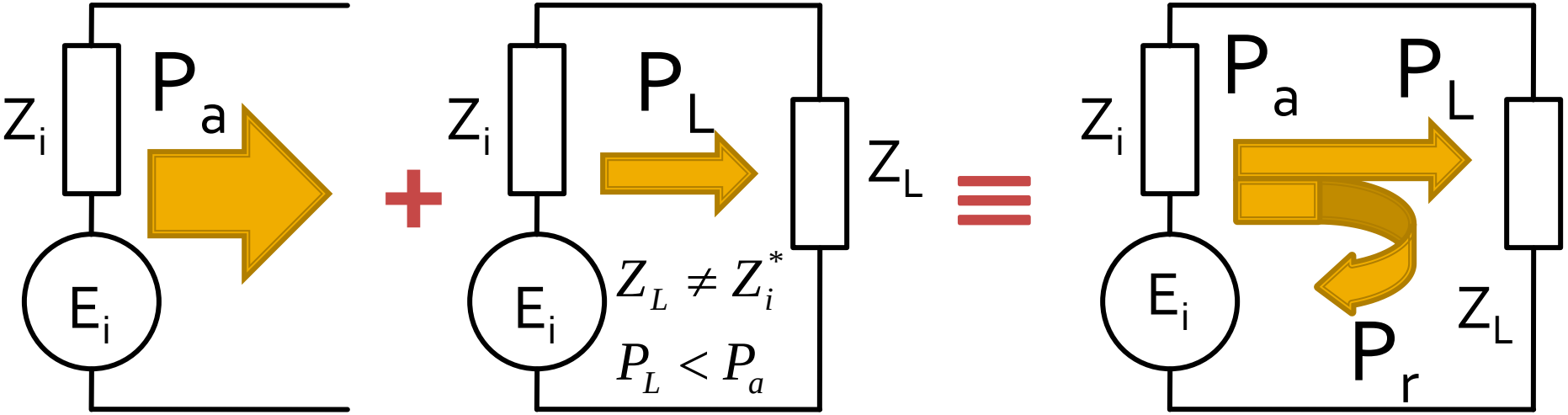

- Generatorul are posibilitatea de a oferi o anumita putere maxima de semnal P_a
- Pentru o sarcina oarecare, acesteia i se ofera o putere de semnal mai mica $P_L < P_a$
- Se intampla **"ca si cum"** (model) o parte din putere se reflecta $P_r = P_a - P_L$
- Puterea este o marime **scalara!**

Adaptarea de impedanța

Diagrama Smith

Cuprins

- Linii de transmisie
- Adaptarea de impedanța
- Cuploare direcționale
- Divizoare de putere
- Amplificatoare de microunde
- Filtre de microunde
- Oscilatoare de microunde ?

Diagrama Smith

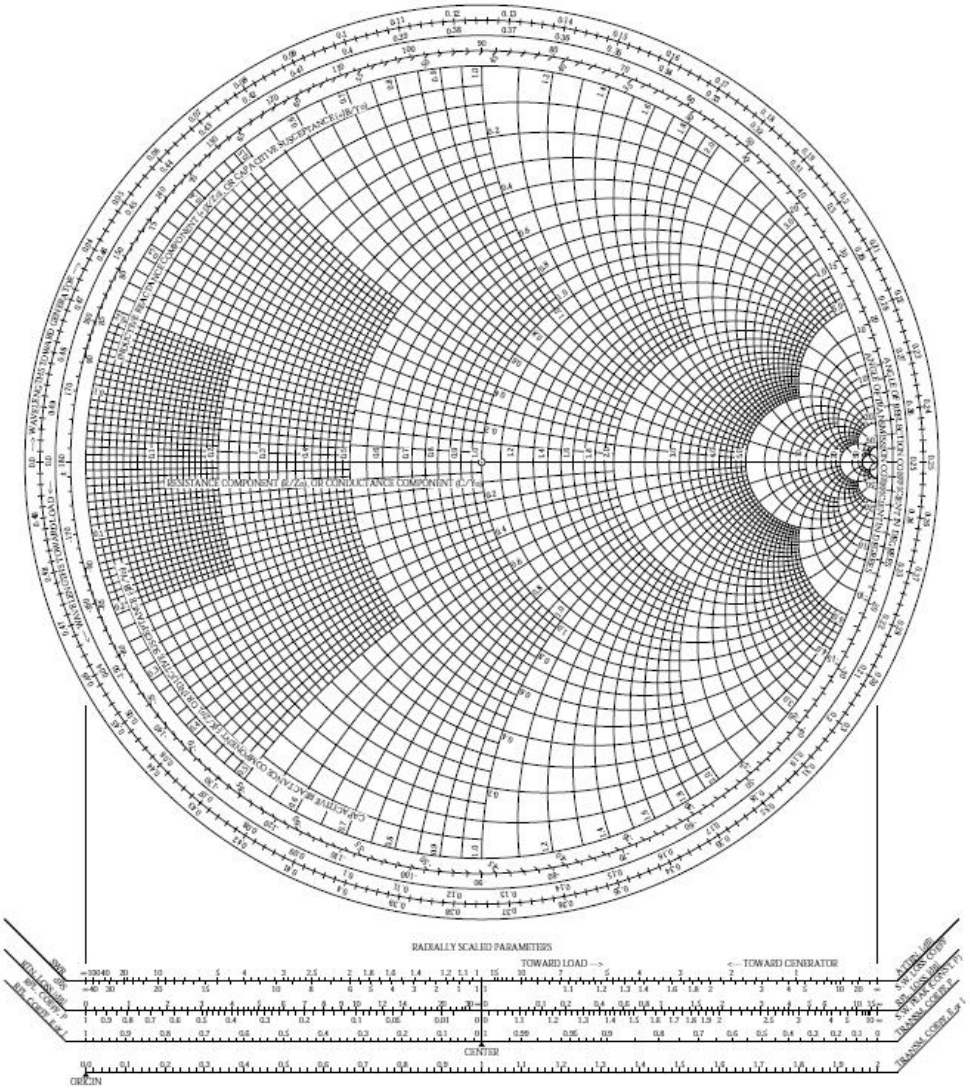

Diagrama Smith

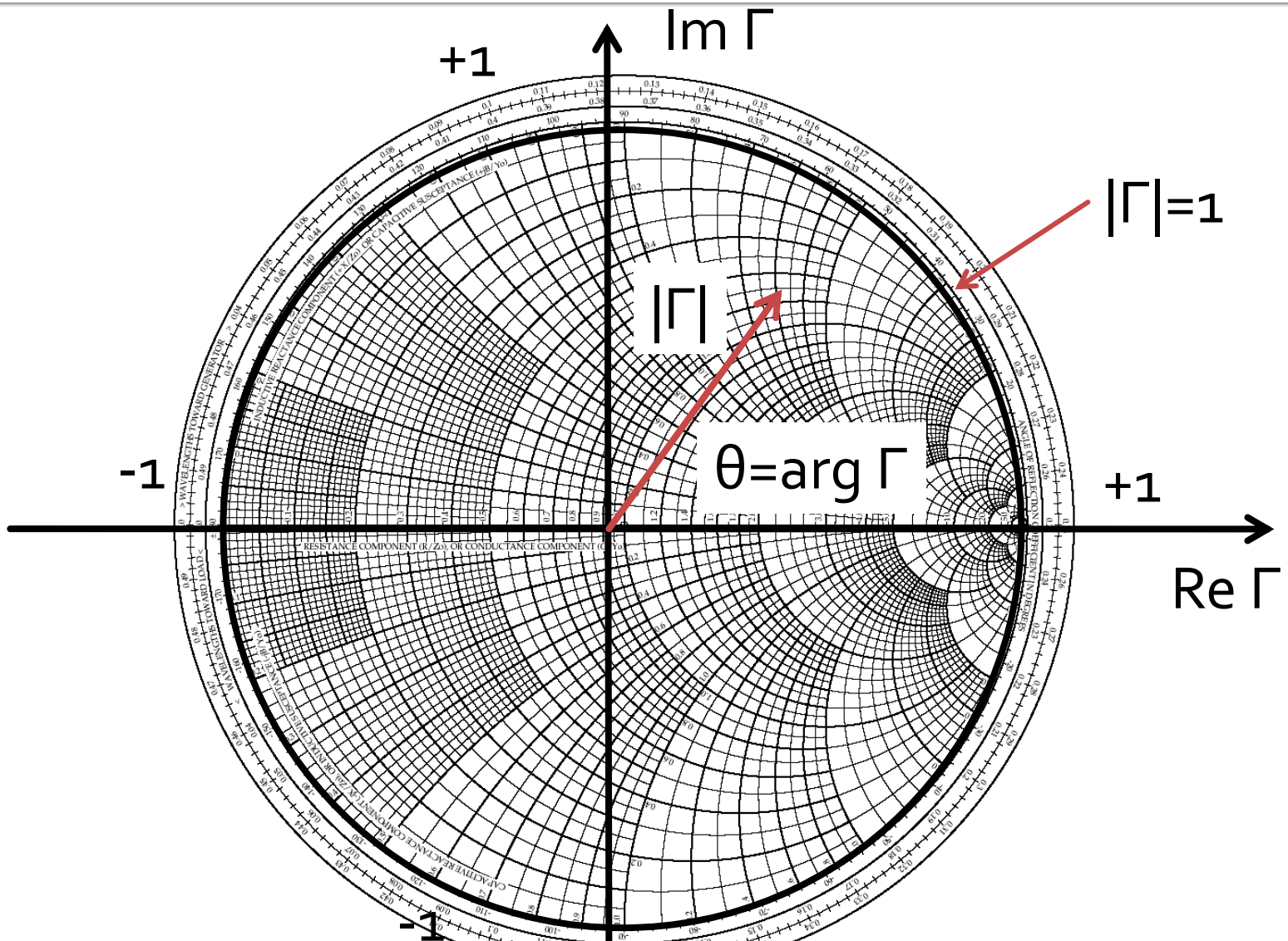

Diagrama Smith

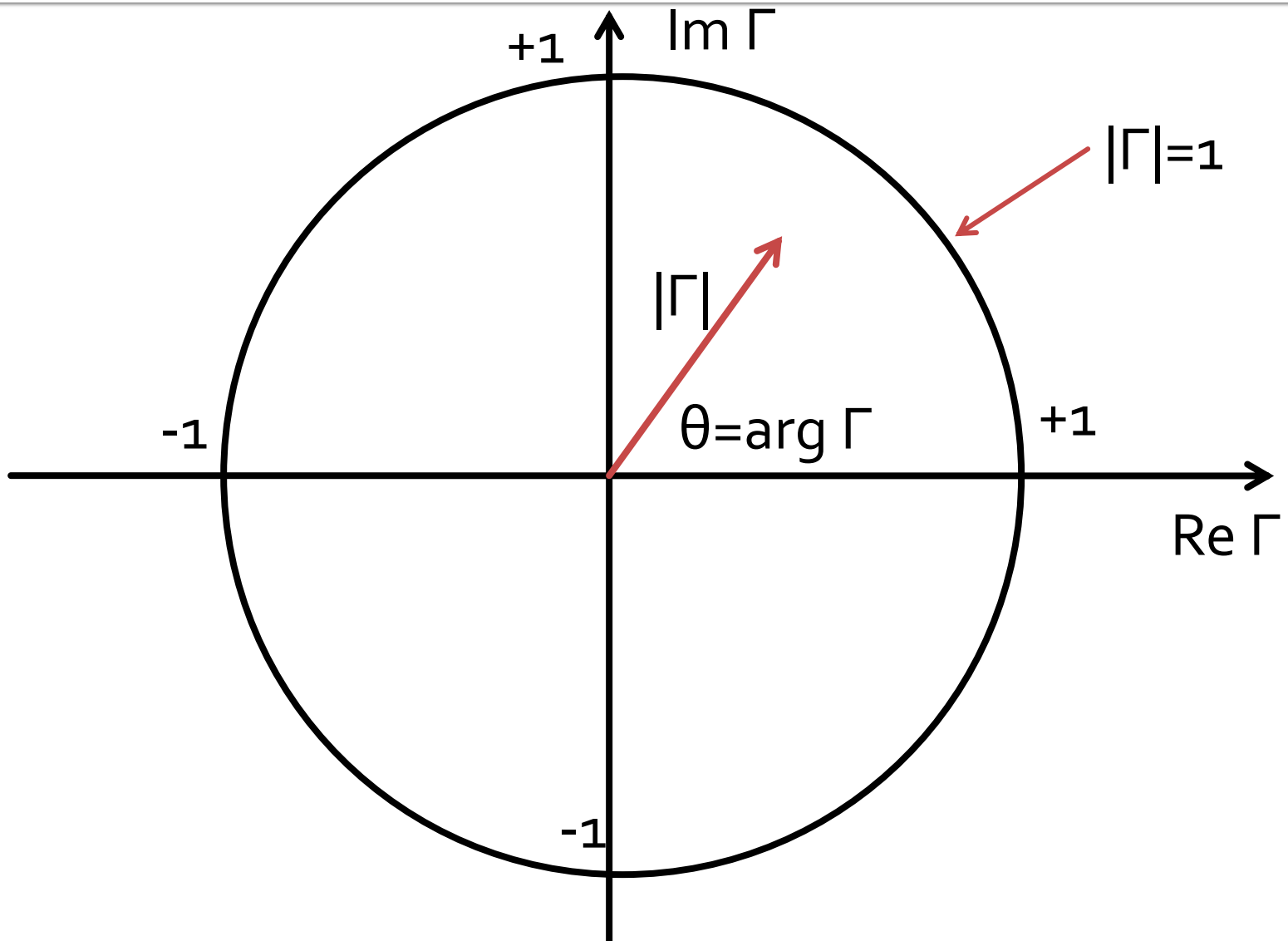

Adaptarea cu sectiuni de linii (stub)

Adaptarea de impedanța

Diagrama Smith, r=1 si g=1

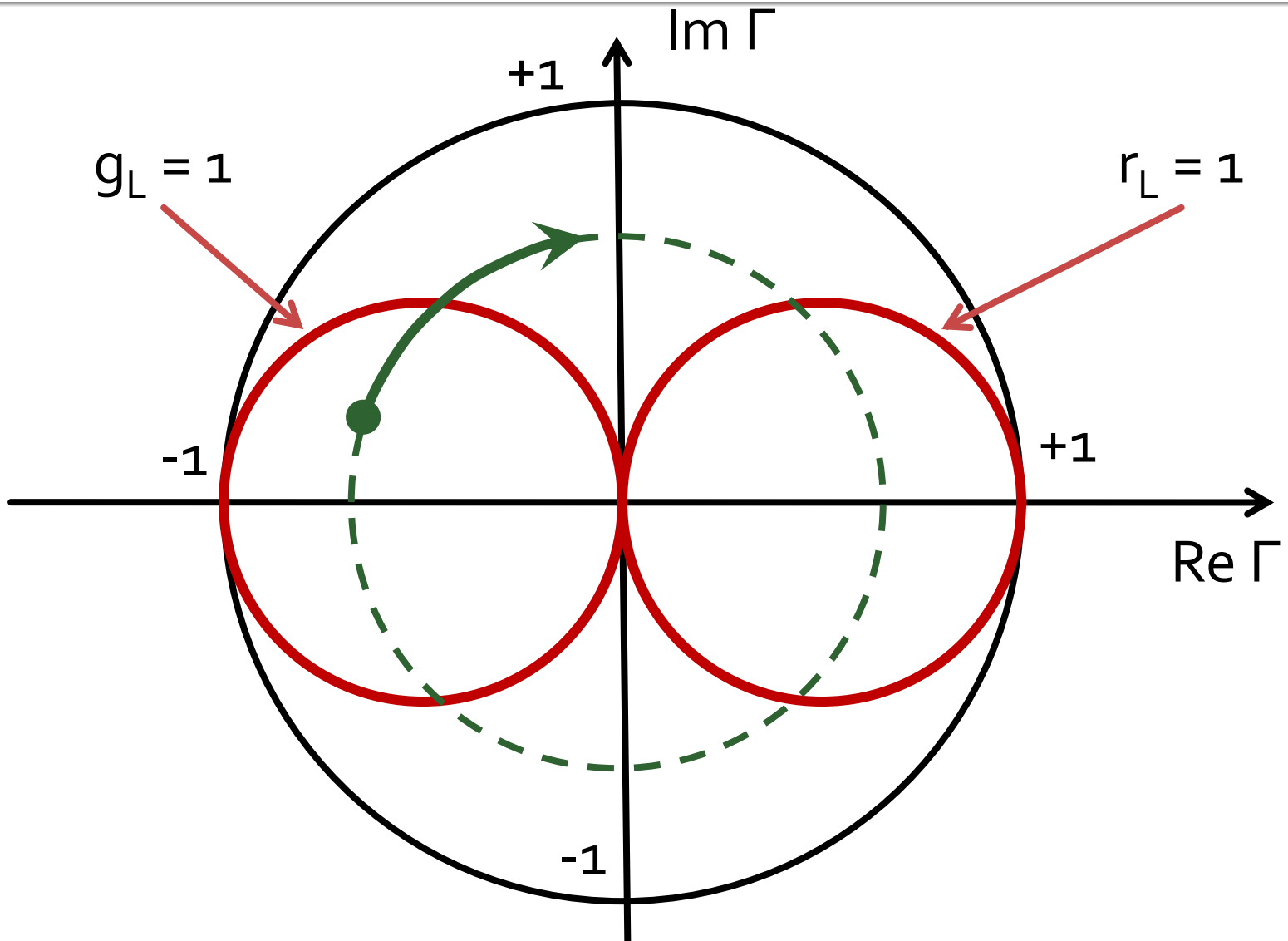

Single stub tuning

- Shunt Stub (sectiune de linie in paralel)

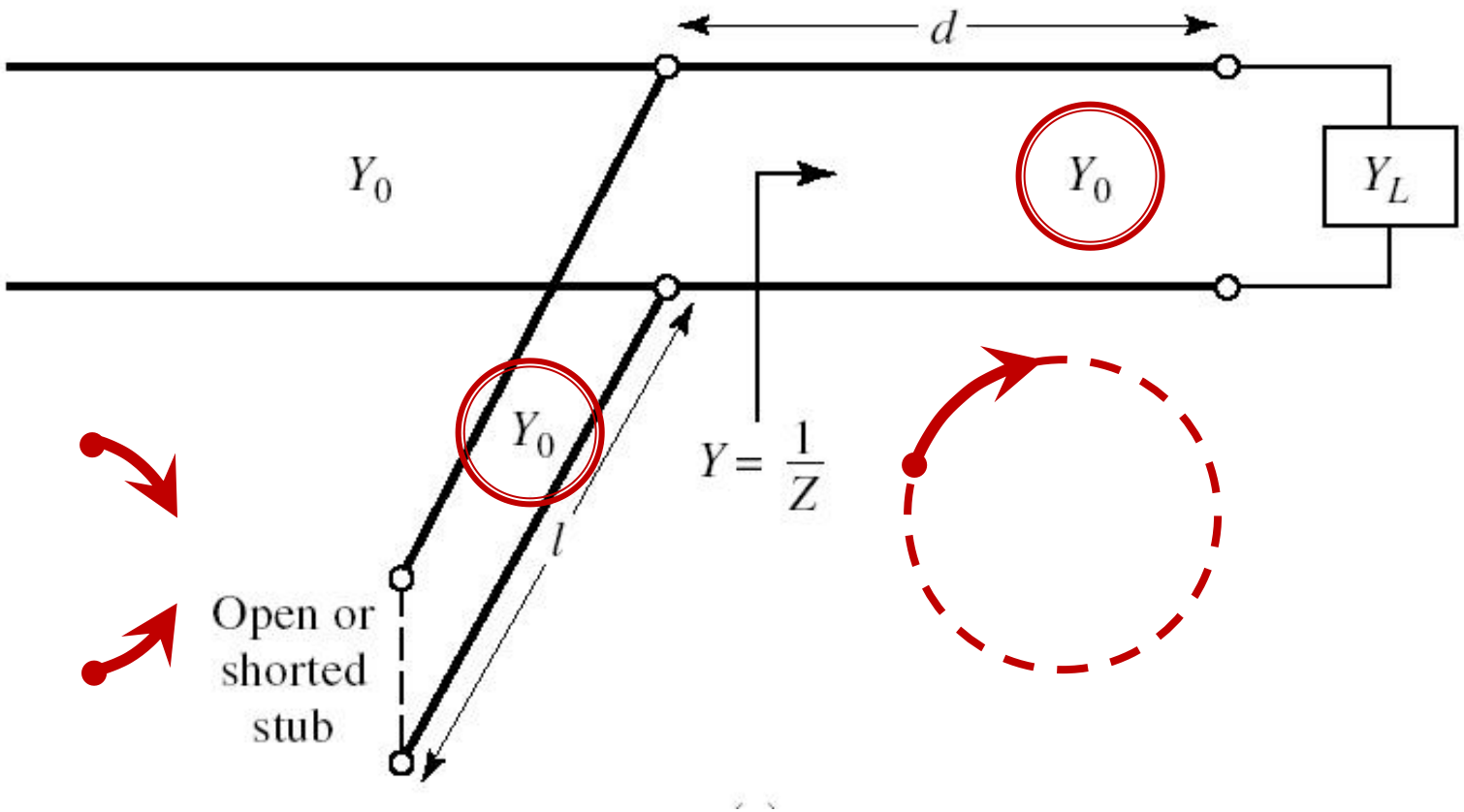

Single stub tuning

- Series Stub (sectiune de linie in serie)
- tehnologic mai dificil de realizat la liniile monofilare (microstrip)

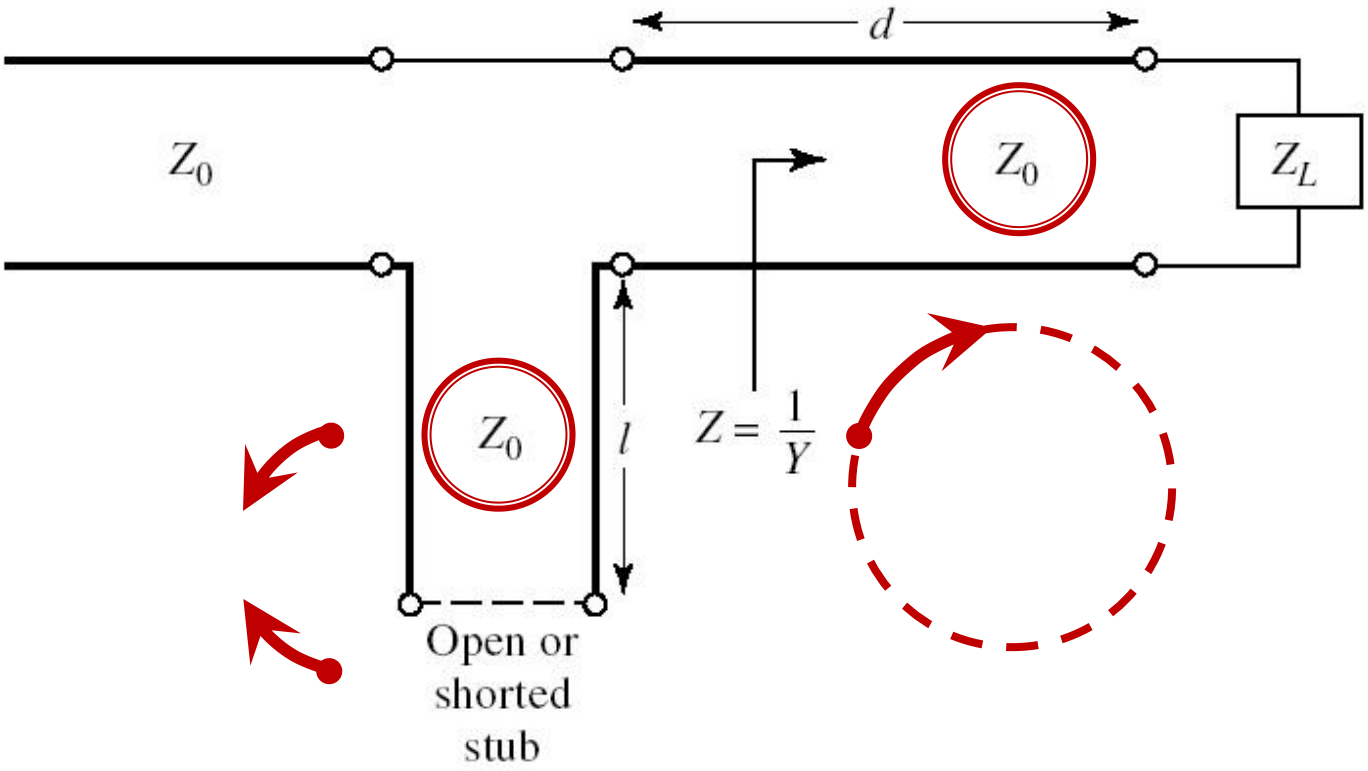

Solutii analitice

Examen / Proiect

Caz 1, Shunt Stub

- Shunt Stub (sectiune de linie in paralel)

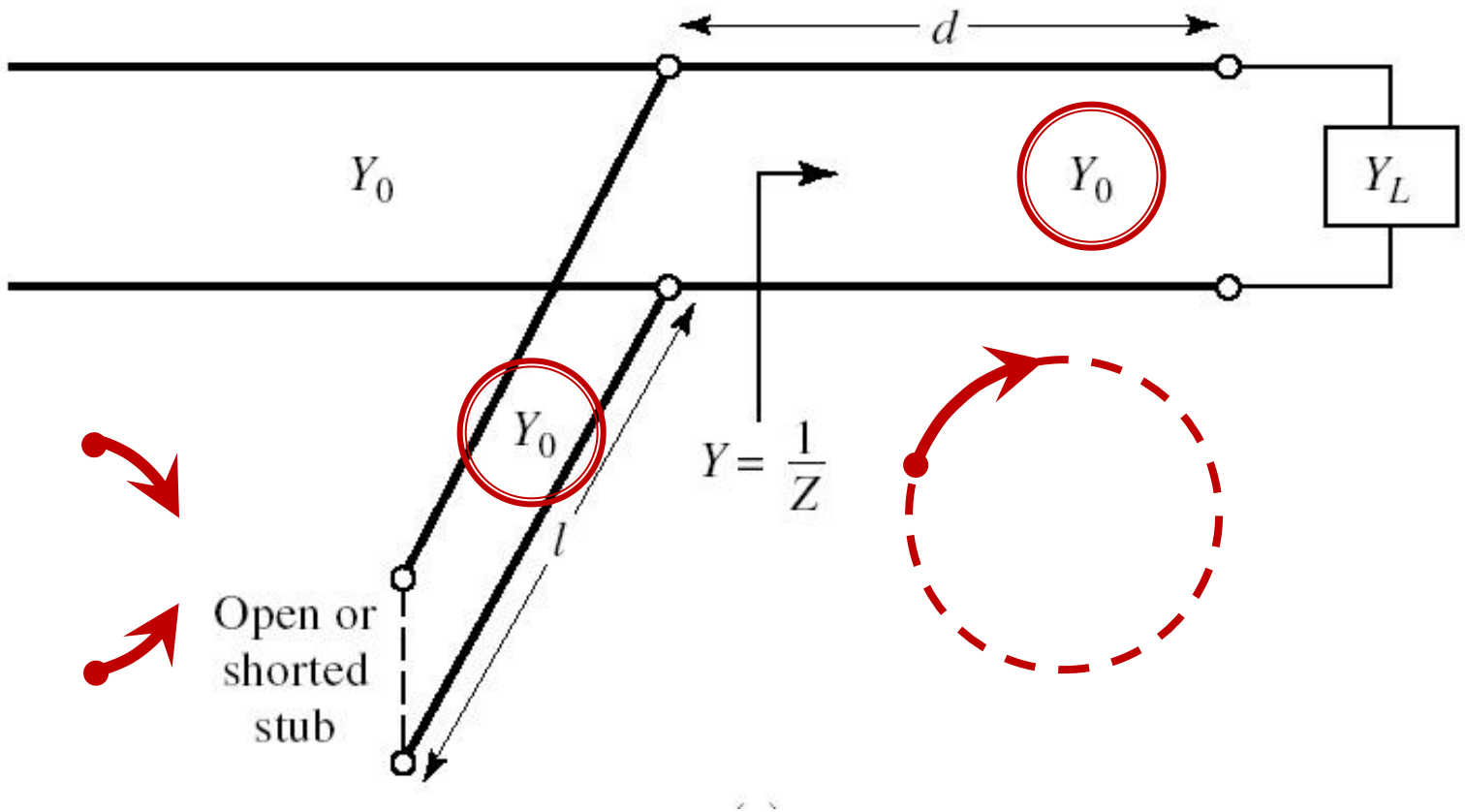

Adaptare, linie serie + susceptanta in paralel

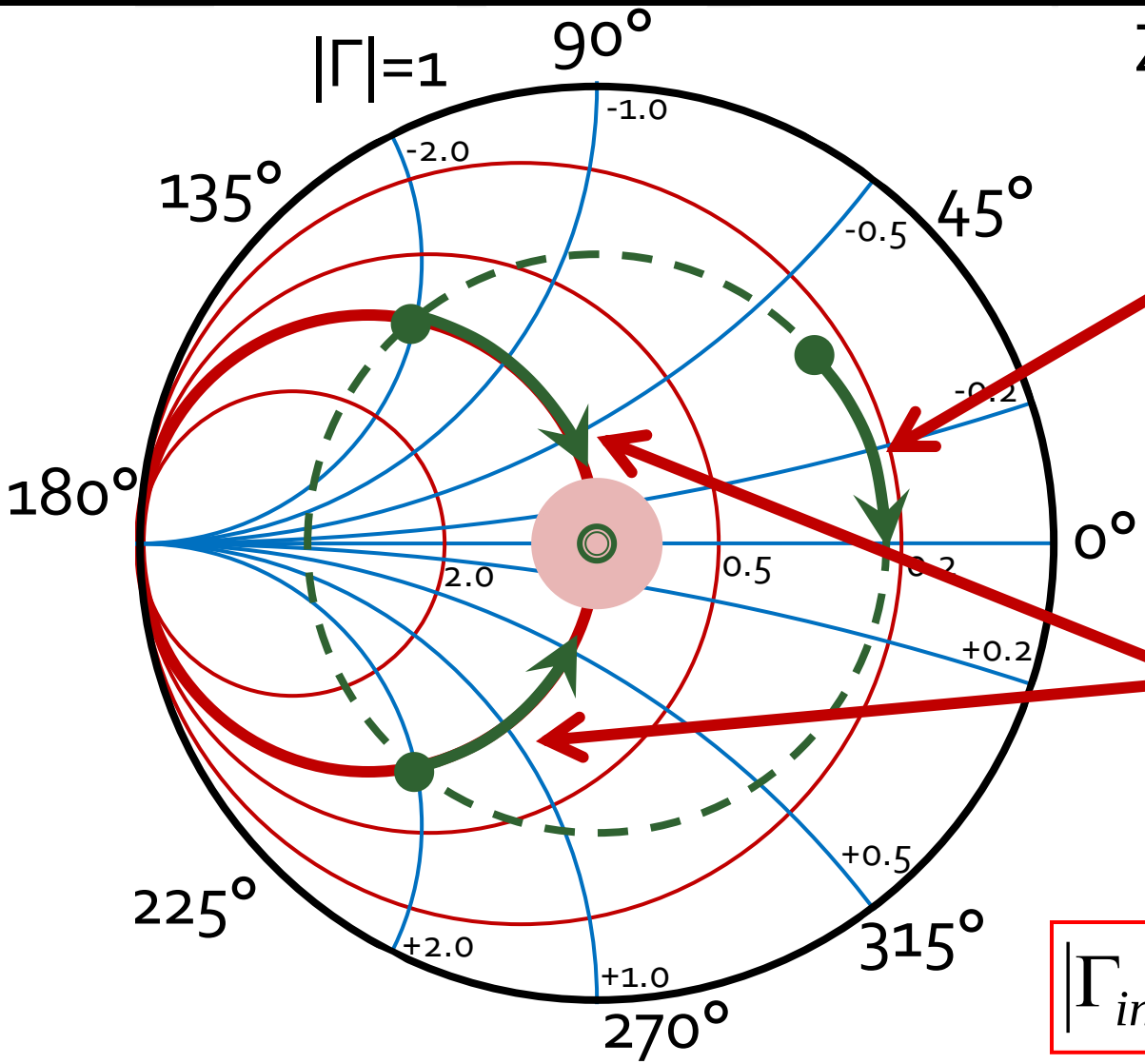

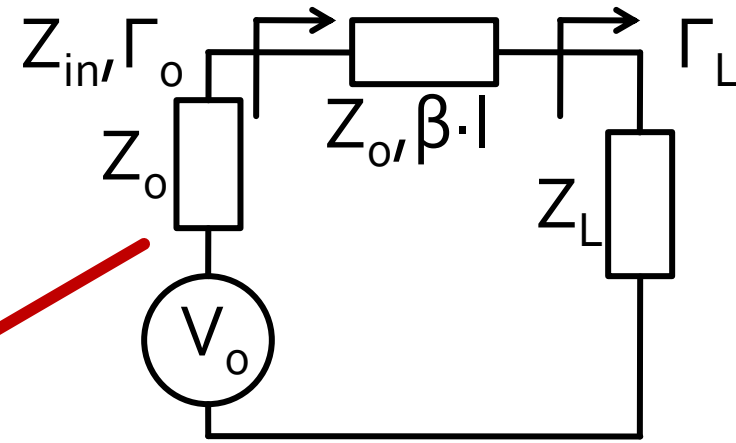

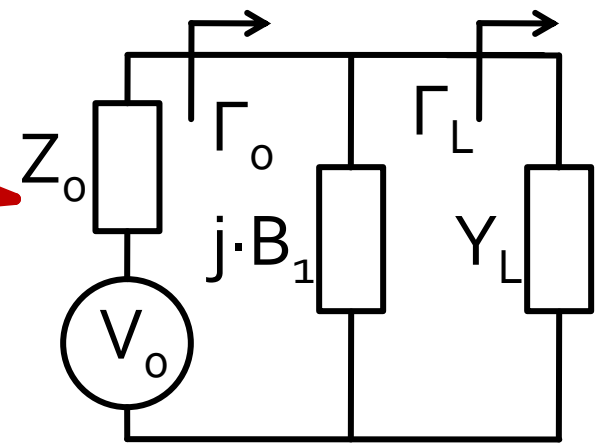

$$\boxed{|\Gamma_{in}| = |\Gamma_L|}$$

$$\boxed{g_{in} = 1}$$

Calcul analitic (calcul efectiv)

$$\boxed{\cos(\varphi + 2\theta) = -|\Gamma_S|}$$

$$\boxed{\theta_{sp} = \beta \cdot l = \tan^{-1} \frac{\mp 2 \cdot |\Gamma_S|}{\sqrt{1 - |\Gamma_S|^2}}}$$

$$\Gamma_S = 0.593 \angle 46.85°$$

$$|\Gamma_S| = 0.593; \quad \varphi = 46.85° \qquad \cos(\varphi + 2\theta) = -0.593 \Rightarrow \quad (\varphi + 2\theta) = \pm 126.35°$$

- **Semnul** (+/-) solutiei alese la ecuatia **liniei serie** impune **semnul** solutiei utilizate la ecuatia **stub-ului paralel**
  - **solutia "cu +"**

    $$(46.85° + 2\theta) = +126.35° \qquad \theta = +39.7° \qquad \operatorname{Im} y_S = \frac{-2 \cdot |\Gamma_S|}{\sqrt{1 - |\Gamma_S|^2}} = -1.472$$

    $$\theta_{sp} = \tan^{-1}(\operatorname{Im} y_S) = -55.8° \underline{(+180°)} \rightarrow \theta_{sp} = 124.2°$$

  - **solutia "cu -"**

    $$(46.85° + 2\theta) = -126.35° \qquad \theta = -86.6° \underline{(+180°)} \rightarrow \theta = 93.4°$$

    $$\operatorname{Im} y_S = \frac{+2 \cdot |\Gamma_S|}{\sqrt{1 - |\Gamma_S|^2}} = +1.472 \qquad \theta_{sp} = \tan^{-1}(\operatorname{Im} y_S) = 55.8°$$

Calcul analitic (calcul efectiv)

$$(\varphi+2\theta)=\begin{cases}+126.35^\circ\\-126.35^\circ\end{cases}\quad \theta=\begin{cases}39.7^\circ\\93.4^\circ\end{cases}\quad \mathrm{Im}[y_S(\theta)]=\begin{cases}-1.472\\+1.472\end{cases}\quad \theta_{sp}=\begin{cases}-55.8^\circ+180^\circ=124.2^\circ\\+55.8^\circ\end{cases}$$

- Se alege **una** din cele doua solutii posibile
- **Semnul** (+/-) solutiei alese la **prima** ecuatie impune **semnul** solutiei utilizate la a **doua** ecuatie

$$l_1=\frac{39.7^\circ}{360^\circ}\cdot\lambda=0.110\cdot\lambda$$

$$l_2=\frac{124.2^\circ}{360^\circ}\cdot\lambda=0.345\cdot\lambda$$

$$l_1=\frac{93.4^\circ}{360^\circ}\cdot\lambda=0.259\cdot\lambda$$

$$l_2=\frac{55.8^\circ}{360^\circ}\cdot\lambda=0.155\cdot\lambda$$

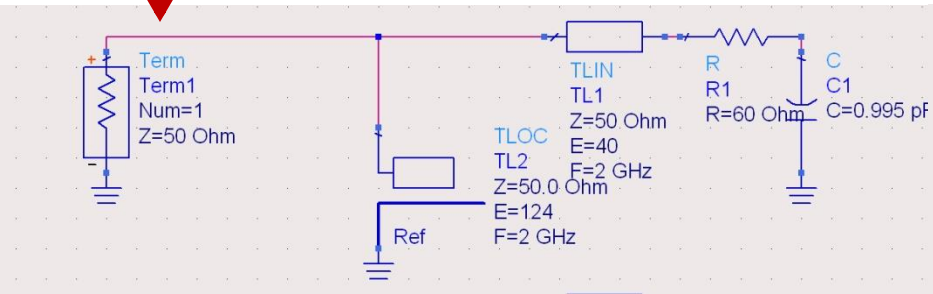

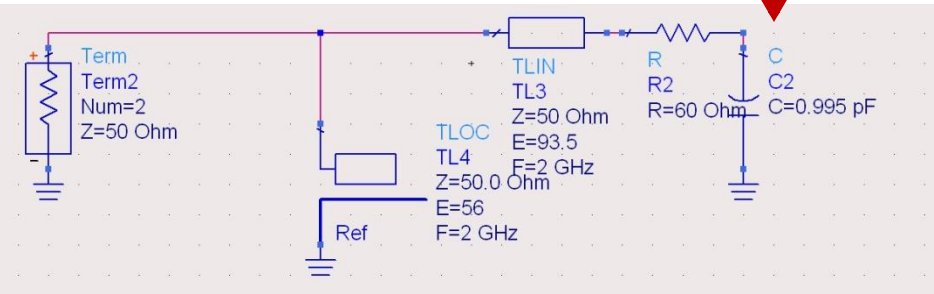

Caz 2, Series Stub

- Series Stub (sectiune de linie in serie)
- tehnologic mai dificil de realizat la liniile monofilare (microstrip)

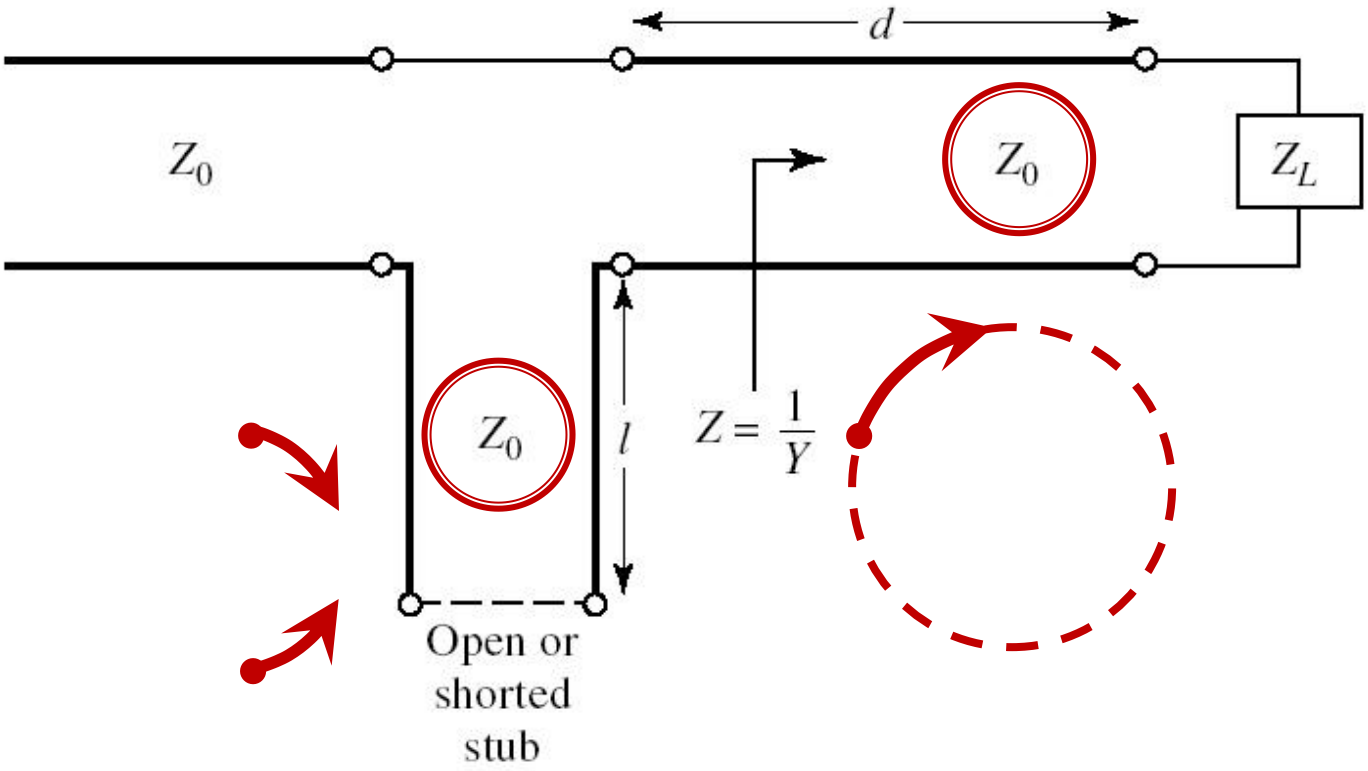

Adaptare, linie serie + reactanta in serie

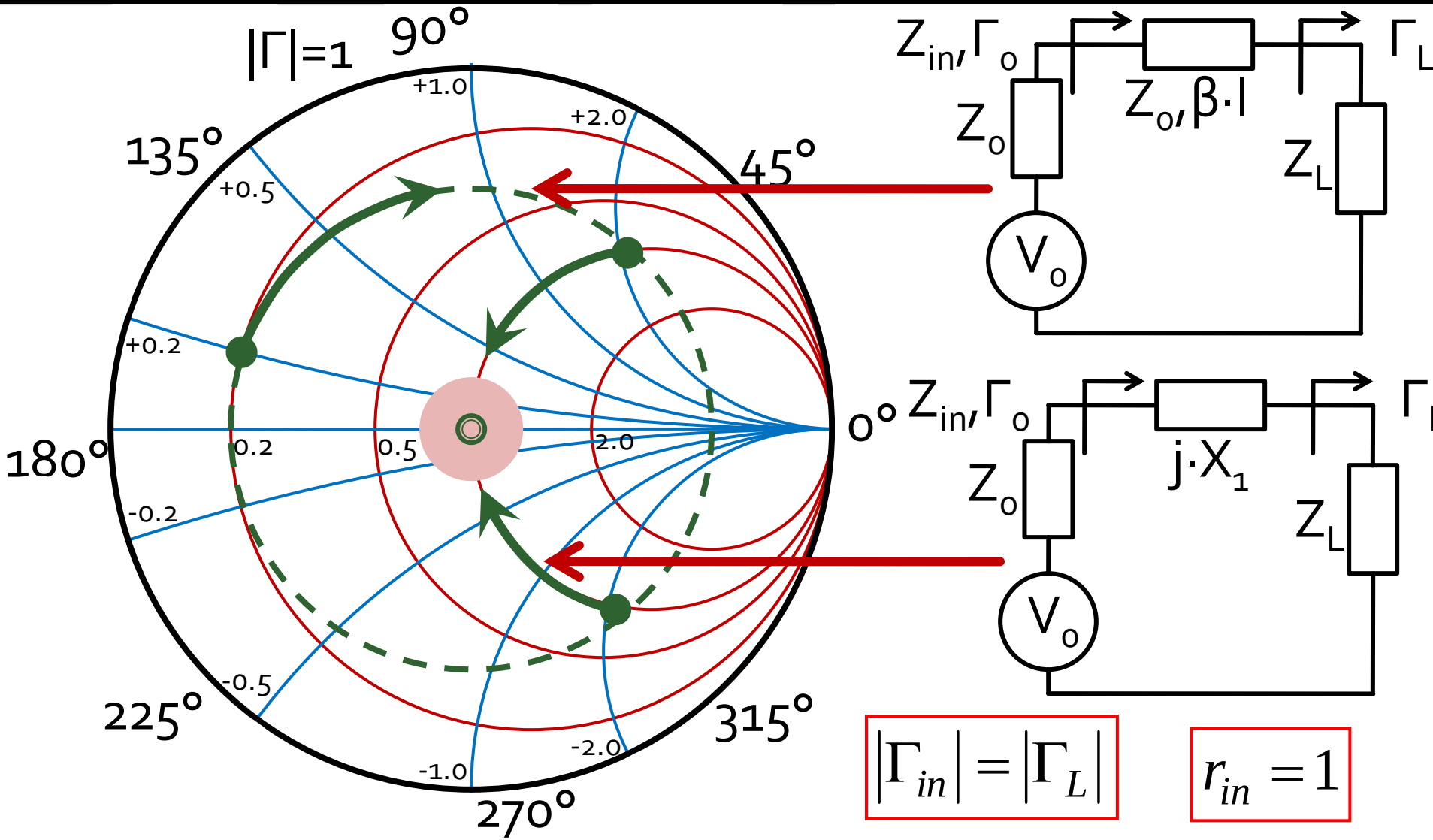

Calcul analitic (calcul efectiv)

$$\boxed{\cos(\varphi + 2\theta) = |\Gamma_S|}$$

$$\boxed{\theta_{ss} = \beta \cdot l = \cot^{-1} \frac{\mp 2 \cdot |\Gamma_S|}{\sqrt{1 - |\Gamma_S|^2}}}$$

$$\Gamma_S = 0.555\angle -29.92^\circ$$

$$|\Gamma_S| = 0.555; \quad \varphi = -29.92^\circ \qquad \cos(\varphi + 2\theta) = 0.555 \Rightarrow (\varphi + 2\theta) = \pm 56.28^\circ$$

- **Semnul** (+/-) solutiei alese la ecuatia **liniei serie** impune **semnul** solutiei utilizate la ecuatia **stub-ului serie**
  - **solutia "cu +"**

$$(-29.92^\circ + 2\theta) = +56.28^\circ \qquad \theta = 43.1^\circ \qquad \operatorname{Im} z_S = \frac{+2 \cdot |\Gamma_S|}{\sqrt{1 - |\Gamma_S|^2}} = +1.335$$

$$\theta_{ss} = -\cot^{-1}(\operatorname{Im} z_S) = -36.8^\circ \underline{(+180^\circ)} \rightarrow \theta_{ss} = 143.2^\circ$$

  - **solutia "cu -"**

$$(-29.92^\circ + 2\theta) = -56.28^\circ \qquad \theta = -13.2^\circ \underline{(+180^\circ)} \rightarrow \theta = 166.8^\circ$$

$$\operatorname{Im} z_S = \frac{-2 \cdot |\Gamma_S|}{\sqrt{1 - |\Gamma_S|^2}} = -1.335 \qquad \theta_{ss} = -\cot^{-1}(\operatorname{Im} z_S) = 36.8^\circ$$

Calcul analitic (calcul efectiv)

$$(\varphi+2\theta)=\begin{cases}+56.28^\circ\\-56.28^\circ\end{cases}\quad \theta=\begin{cases}43.1^\circ\\166.8^\circ\end{cases}\quad \mathrm{Im}[z_S(\theta)]=\begin{cases}+1.335\\-1.335\end{cases}\quad \theta_{ss}=\begin{cases}-36.8^\circ+180^\circ=143.2^\circ\\+36.8^\circ\end{cases}$$

- Se alege **una** din cele doua solutii posibile
- **Semnul** (+/-) solutiei alese la **prima** ecuatie impune **semnul** solutiei utilizate la a **doua** ecuatie

$$l_1=\frac{43.1^\circ}{360^\circ}\cdot\lambda=0.120\cdot\lambda$$

$$l_2=\frac{143.2^\circ}{360^\circ}\cdot\lambda=0.398\cdot\lambda$$

$$l_1=\frac{166.8^\circ}{360^\circ}\cdot\lambda=0.463\cdot\lambda$$

$$l_2=\frac{36.8^\circ}{360^\circ}\cdot\lambda=0.102\cdot\lambda$$

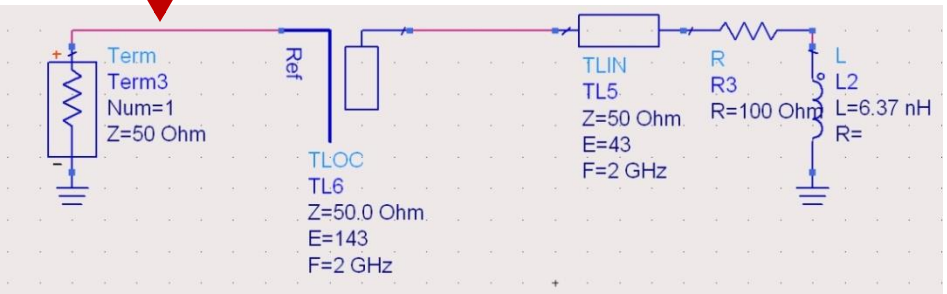

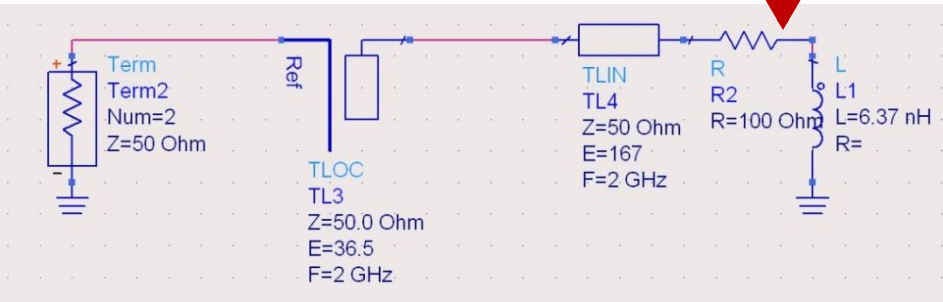

Stub, observatii

- adunarea si scadere de **180°** (λ/2) nu schimba rezultatul (rotatie completa in jurul diagramei

$$E = \beta \cdot l = \pi = 180° \qquad l = k \cdot \frac{\lambda}{2}, \forall k \in \mathbf{N}$$

  - pentru linii de "lungime" / "lungime electrica" **negative** se adauga λ/2 / 180° pentru a avea valoare pozitiva (realizabila fizic)
- o adaugare sau scadere de **90°** (λ/4) transforma impedanta stub-ului:

$$Z_{in,sc} = j \cdot Z_0 \cdot \tan \beta \cdot l \quad \Leftrightarrow \quad Z_{in,g} = -j \cdot Z_0 \cdot \cot \beta \cdot l$$

  - pentru stub se poate adauga/scadea 90° (λ/4) simultan cu schimbare **gol** ⇔ **scurtcircuit**

Amplificatoare de microunde

Cuadripol Amplificator (diport)

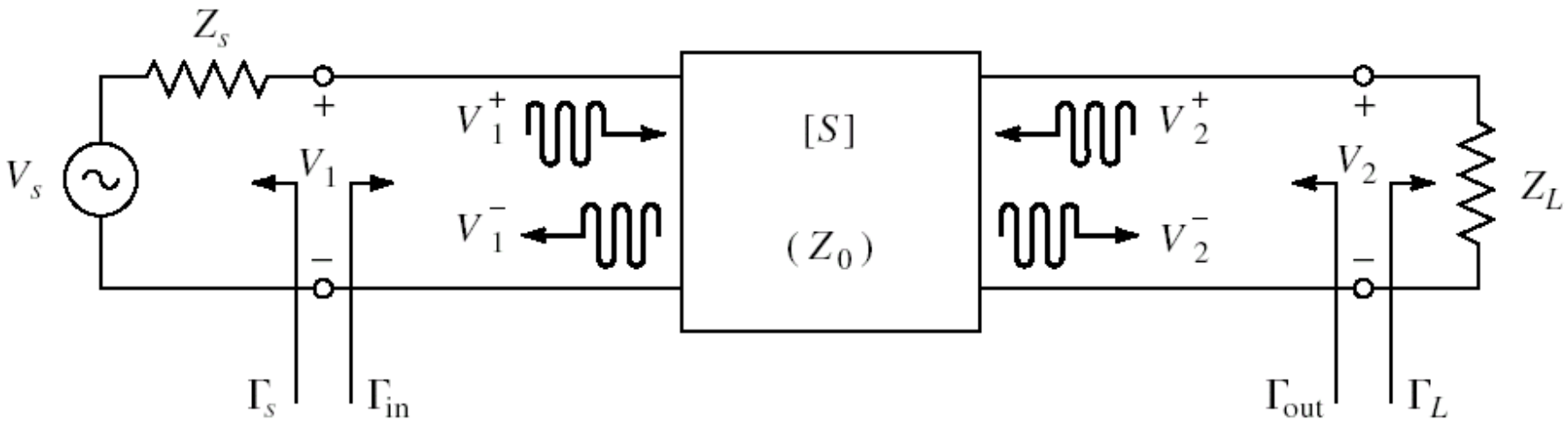

- Caracterizare cu parametri S
- Normalizati la Zo (implicit 50Ω)
- Cataloage: parametri S pentru anumite polarizari

Cataloage

NE46100

VCE = 5 V, IC = 50 mA

FREQUENCY	S_{11}		S_{21}		S_{12}		S_{22}		K	MAG^2
(MHz)	MAG	ANG	MAG	ANG	MAG	ANG	MAG	ANG		(dB)
100	0.778	-137	26.776	114	0.028	30	0.555	-102	0.16	29.8
200	0.815	-159	14.407	100	0.035	29	0.434	-135	0.36	26.2
500	0.826	-177	5.855	84	0.040	38	0.400	-162	0.75	21.7
800	0.827	176	3.682	76	0.052	43	0.402	-169	0.91	18.5
1000	0.826	173	2.963	71	0.058	47	0.405	-172	1.02	16.3
1200	0.825	170	2.441	66	0.064	47	0.412	-174	1.08	14.0
1400	0.820	167	2.111	61	0.069	47	0.413	-176	1.17	12.4
1600	0.828	165	1.863	57	0.078	54	0.426	-177	1.15	11.4
1800	0.827	162	1.671	53	0.087	50	0.432	-178	1.14	10.6
2000	0.828	159	1.484	49	0.093	50	0.431	-180	1.17	9.5
2500	0.822	153	1.218	39	0.11	48	0.462	177	1.18	7.8
3000	0.818	148	1.010	30	0.135	46	0.490	174	1.16	6.3
3500	0.824	142	0.876	21	0.147	44	0.507	170	1.16	5.3
4000	0.812	137	0.762	13	0.168	38	0.535	167	1.14	4.3

VCE = 5 V, IC = 100 mA

100	0.778	-144	27.669	111	0.027	35	0.523	-114	0.27	30.2
200	0.820	-164	14.559	97	0.029	29	0.445	-144	0.42	27.0
500	0.832	-179	5.885	84	0.035	38	0.435	-166	0.81	22.2
800	0.833	175	3.691	76	0.048	45	0.435	-173	0.95	18.8
1000	0.831	172	2.980	71	0.056	51	0.437	-176	1.05	16.0
1200	0.836	169	2.464	67	0.061	52	0.432	-178	1.11	14.0
1400	0.829	166	2.121	61	0.072	53	0.447	-180	1.12	12.6
1600	0.831	164	1.867	58	0.080	54	0.445	179	1.14	11.4

S2P - Touchstone

- Fisiere format Touchstone (*.s2p)

```
! SIEMENS Small Signal Semiconductors
! VDS = 3.5 V     ID = 15 mA
# GHz  S  MA  R  50
!  f        S11          S21          S12          S22
! GHz     MAG   ANG     MAG   ANG     MAG   ANG     MAG   ANG
 1.000 0.9800  -18.0   2.230  157.0  0.0240   74.0  0.6900  -15.0
 2.000 0.9500  -39.0   2.220  136.0  0.0450   57.0  0.6600  -30.0
 3.000 0.8900  -64.0   2.210  110.0  0.0680   40.0  0.6100  -45.0
 4.000 0.8200  -89.0   2.230   86.0  0.0850   23.0  0.5600  -62.0
 5.000 0.7400 -115.0   2.190   61.0  0.0990    7.0  0.4900  -80.0
 6.000 0.6500 -142.0   2.110   36.0  0.1070  -10.0  0.4100  -98.0
!
!  f      Fmin   Gammaopt  rn/50
! GHz      dB    MAG  ANG    -
 2.000     1.00  0.72   27   0.84
 4.000     1.40  0.64   61   0.58
```

Diport amplificator

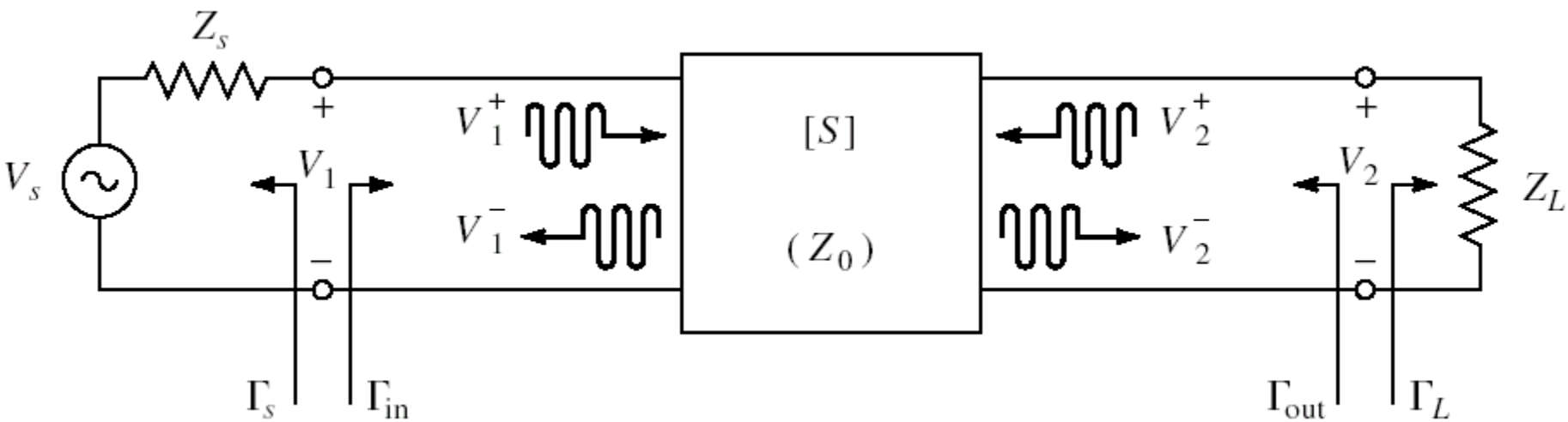

$$\Gamma_{in} = \frac{V_1^-}{V_1^+} = S_{11} + \frac{S_{12} \cdot S_{21} \cdot \Gamma_L}{1 - S_{22} \cdot \Gamma_L}$$

$$\Gamma_{out} = \frac{V_2^-}{V_2^+} = S_{22} + \frac{S_{12} \cdot S_{21} \cdot \Gamma_S}{1 - S_{11} \cdot \Gamma_S}$$

Puteri / Adaptare

- Doua porturi in care adaptarea influențează transferul de putere

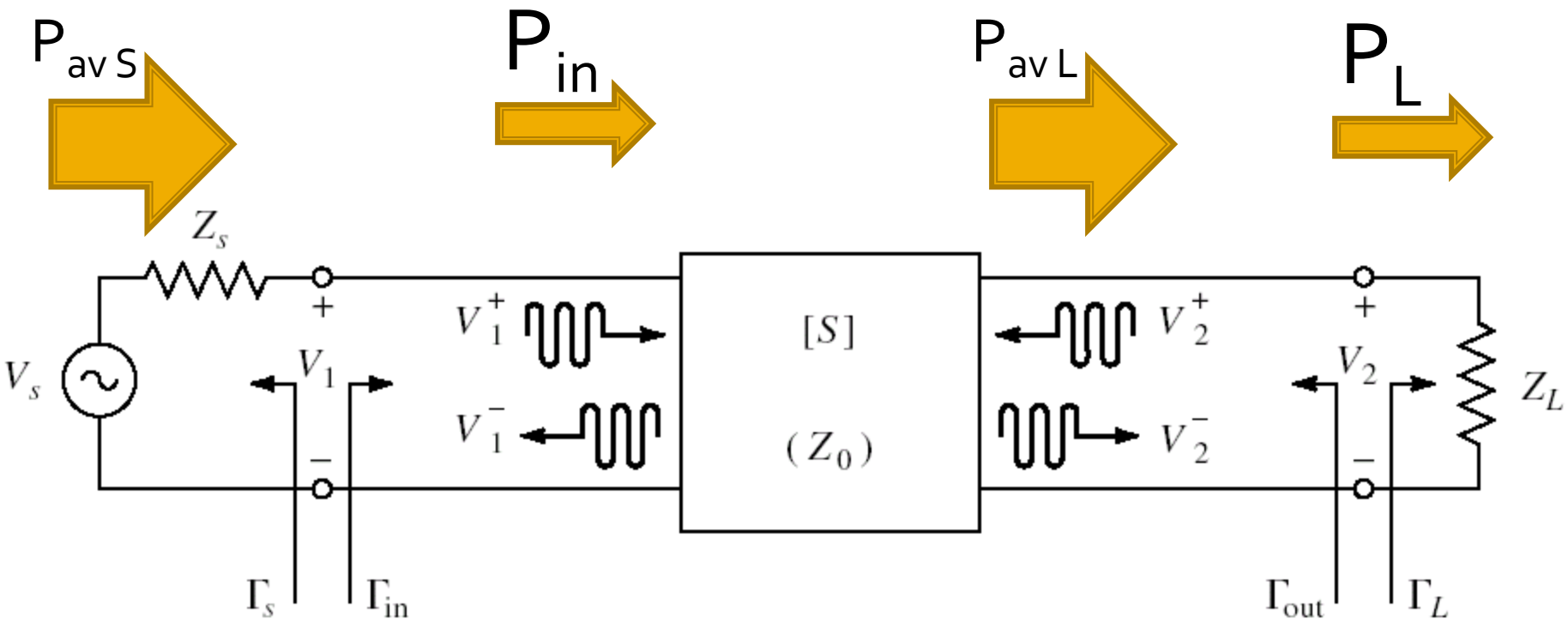

Castig de putere

- Castigul de putere de **transfer** (transducer power gain)

$$G_T = \frac{P_L}{P_{av\,S}} = \frac{|S_{21}|^2 \cdot \left(1-|\Gamma_S|^2\right)\cdot\left(1-|\Gamma_L|^2\right)}{|1-\Gamma_S \cdot \Gamma_{in}|^2 \cdot |1-S_{22}\cdot\Gamma_L|^2}$$

$$\Gamma_{in} = \Gamma_{in}(\Gamma_L)$$

- Castigul de putere de **transfer unilateral**

$$G_{TU} = |S_{21}|^2 \cdot \frac{1-|\Gamma_S|^2}{|1-S_{11}\cdot\Gamma_S|^2} \cdot \frac{1-|\Gamma_L|^2}{|1-S_{22}\cdot\Gamma_L|^2}$$

$$S_{12} \cong 0 \qquad \Gamma_{in} = S_{11}$$

Permite tratarea separata a intrarii si iesirii

Cuadripol Amplificator

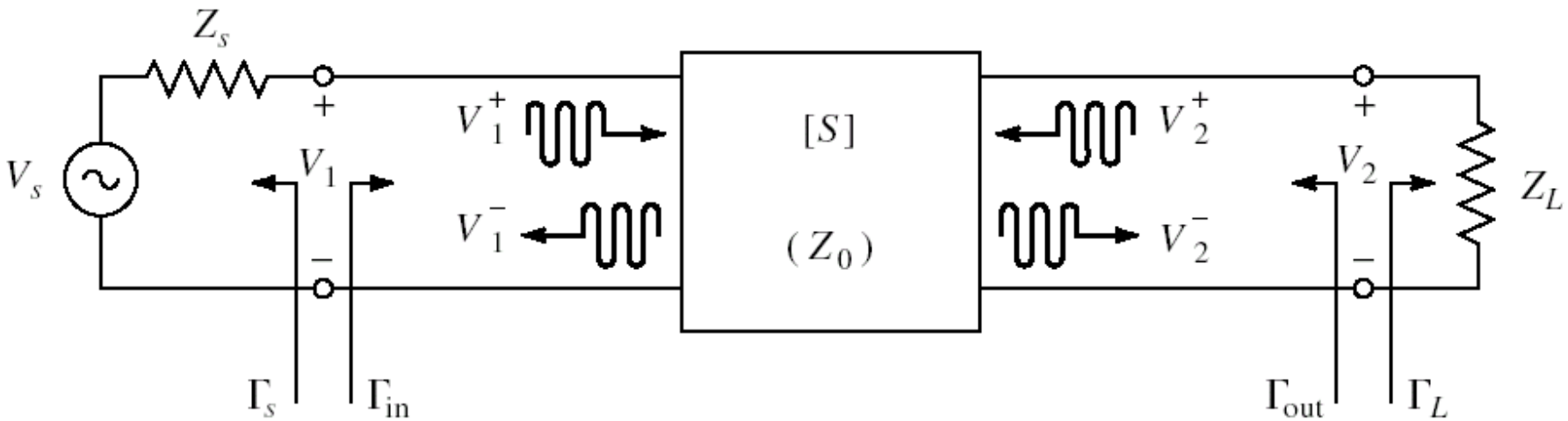

- marimi care intereseaza:
  - stabilitate
  - castig de putere
  - zgomot (uneori – semnal mic)
  - liniaritate (uneori – semnal mare)

Amplificatoare de microunde

Stabilitate

Cuadripol Amplificator

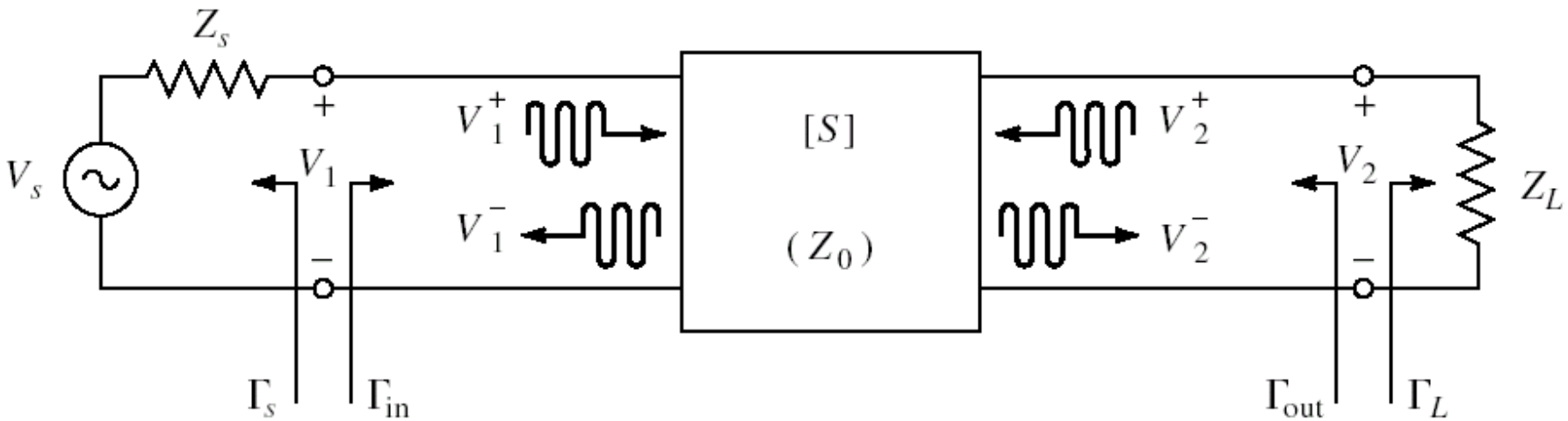

- marimi care intereseaza:
  - **stabilitate**
  - castig de putere
  - zgomot (uneori – semnal mic)
  - liniaritate (uneori – semnal mare)

Stabilitate

$$\left|\Gamma_L - \frac{\left(S_{22} - \Delta \cdot S_{11}^*\right)^*}{\left|S_{22}\right|^2 - \left|\Delta\right|^2}\right| = \left|\frac{S_{12} \cdot S_{21}}{\left|S_{22}\right|^2 - \left|\Delta\right|^2}\right|$$

$$\left(x - x_0\right)^2 + \left(y - y_0\right)^2 = R^2$$

$$\left|\Gamma - \Gamma_0\right| = R$$

$$\boxed{\left|\Gamma - \Gamma_0\right| = R}$$

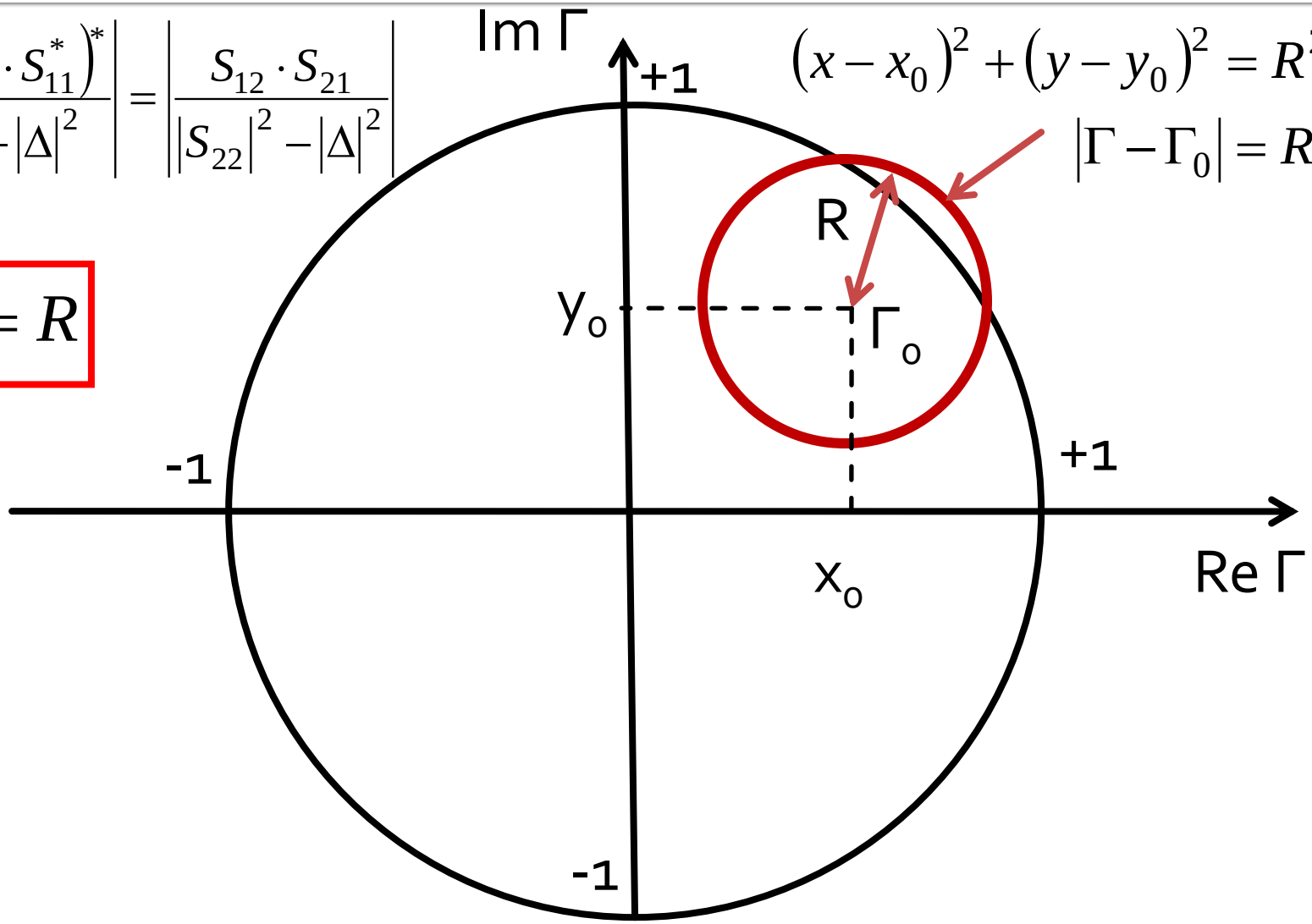

Cerc de stabilitate la iesire (CSOUT)

$$\left|\Gamma_L - \frac{\left(S_{22} - \Delta \cdot S_{11}^*\right)^*}{\left|S_{22}\right|^2 - \left|\Delta\right|^2}\right| = \left|\frac{S_{12} \cdot S_{21}}{\left|S_{22}\right|^2 - \left|\Delta\right|^2}\right| \qquad \left|\Gamma_L - C_L\right| = R_L$$

- Ecuatia unui cerc, care reprezinta locul geometric al punctelor Γ_L pentru **limita** de stabilitate
- Cercul se numeste **cerc de stabilitate la iesire** (Γ_L)

$$C_L = \frac{\left(S_{22} - \Delta \cdot S_{11}^*\right)^*}{\left|S_{22}\right|^2 - \left|\Delta\right|^2} \qquad R_L = \frac{\left|S_{12} \cdot S_{21}\right|}{\left|\left|S_{22}\right|^2 - \left|\Delta\right|^2\right|}$$

CSIN, CSOUT

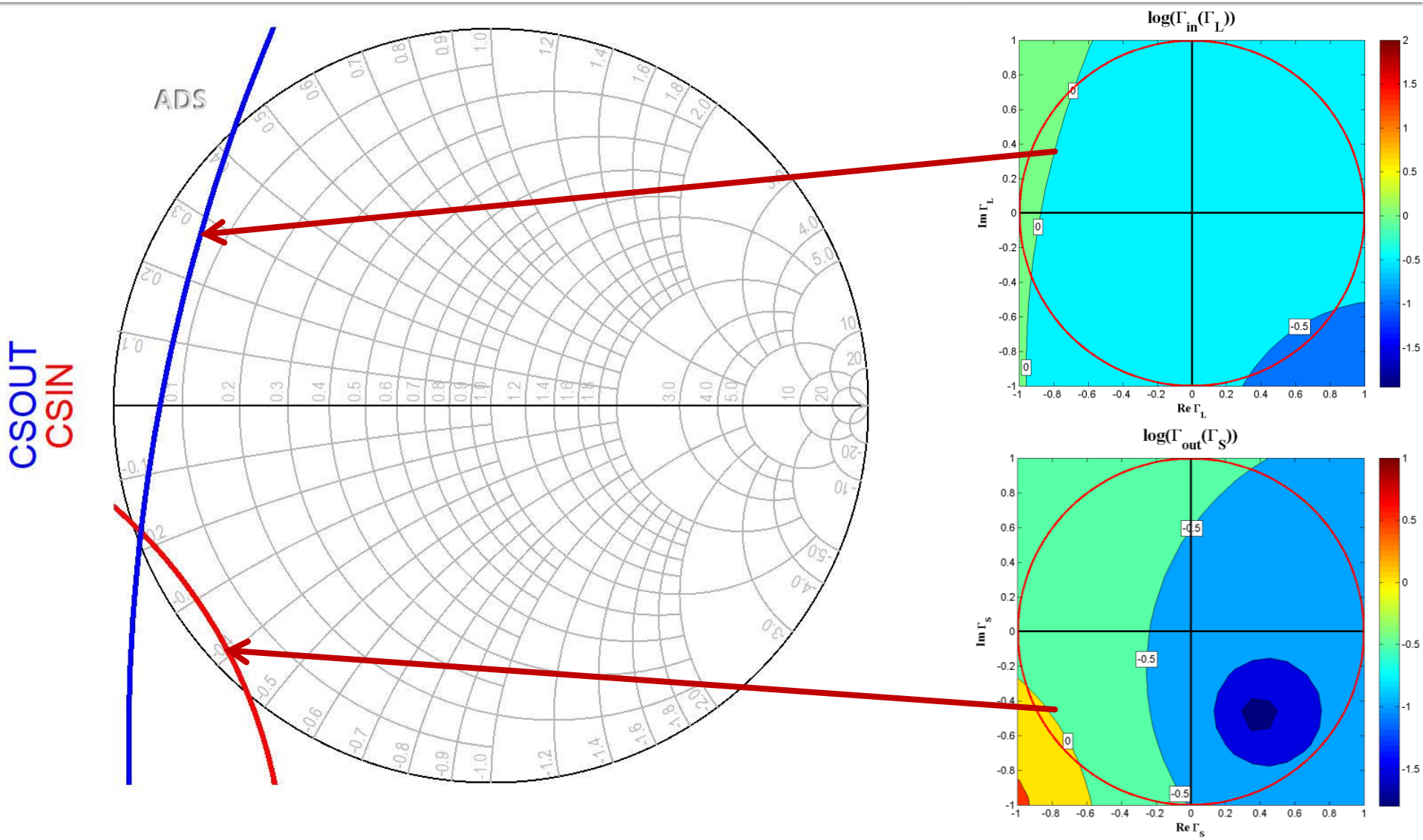

Conditia Rollet

$$K = \frac{1 - |S_{11}|^2 - |S_{22}|^2 + |\Delta|^2}{2 \cdot |S_{12} \cdot S_{21}|} \qquad \Delta = S_{11} \cdot S_{22} - S_{12} \cdot S_{21}$$

- Diportul este **neconditionat stabil** daca:
- Sunt indeplinite simultan conditiile
  - K > 1
  - |Δ| < 1
- Sunt valabile si conditiile implicite
  - |S11| < 1
  - |S22| < 1

$$K = \frac{1 - |S_{11}|^2 - |S_{22}|^2 + |\Delta|^2}{2 \cdot |S_{12} \cdot S_{21}|} > 1 \qquad |\Delta| = |S_{11} \cdot S_{22} - S_{12} \cdot S_{21}| < 1$$

Stabilitate

- ATF-34143 **at Vds=3V Id=20mA**.
- @0.5÷18GHz
- Neconditionat stabil pentru f > 6.31GHz

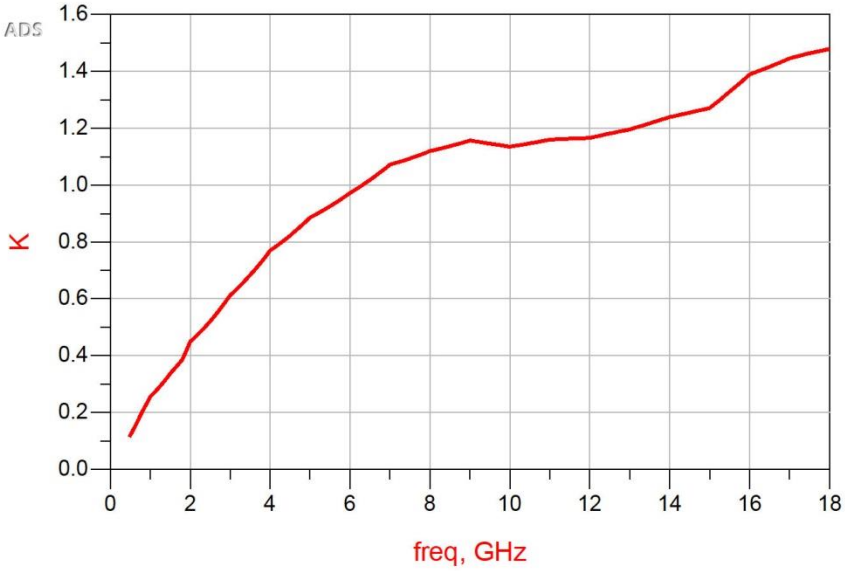

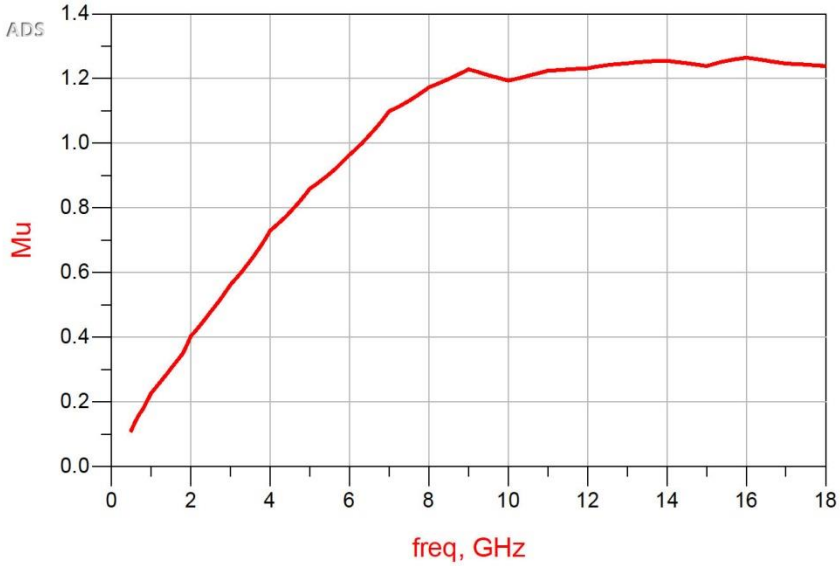

Rezistenta serie la intrare

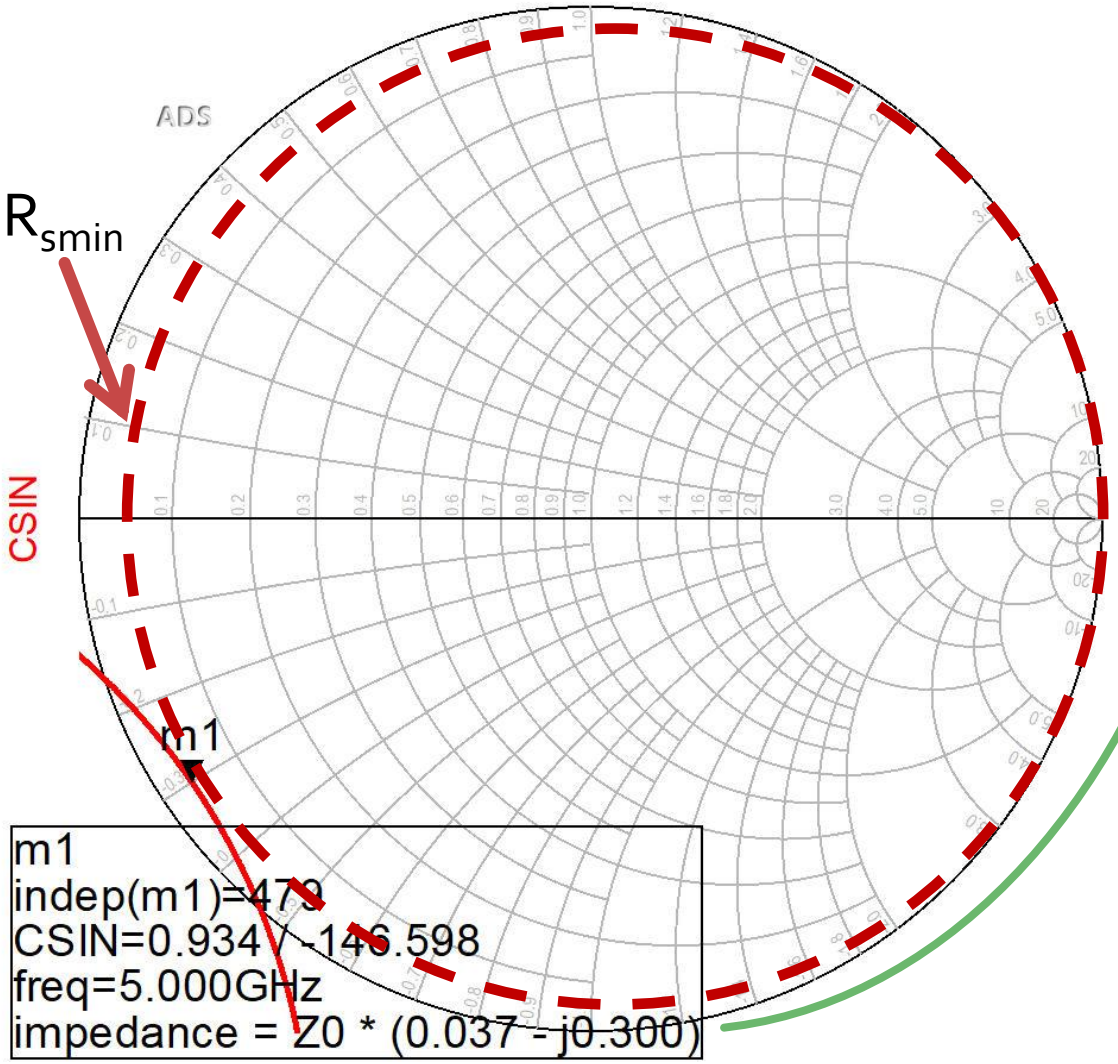

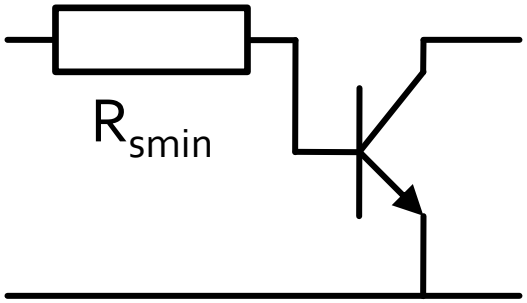

$$z = 0.037 - j \cdot 0.3$$

$$R_{s\,\min} = 0.037 \cdot 50\Omega = 1.85\Omega$$

ADS, Rs = 2Ω

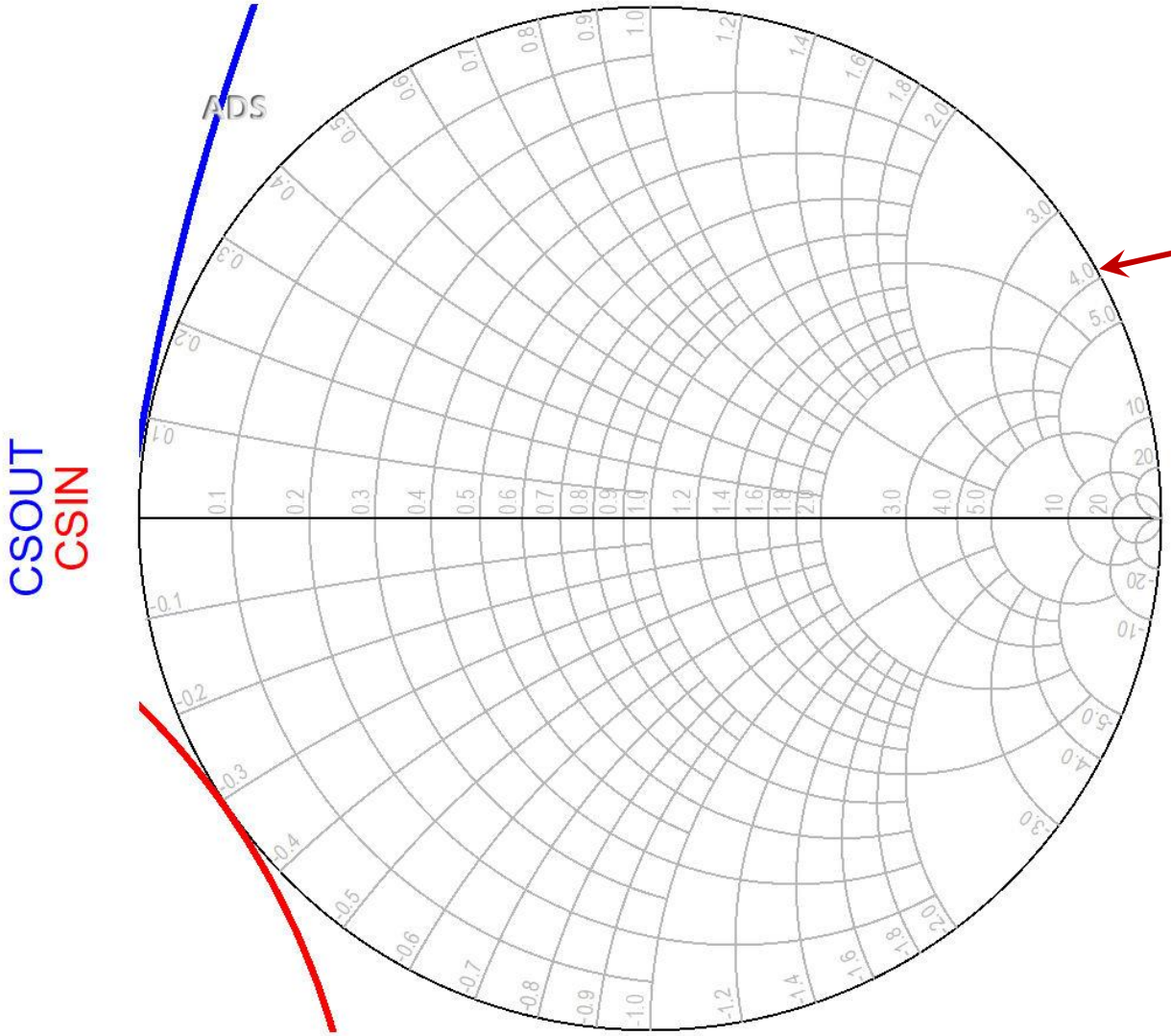

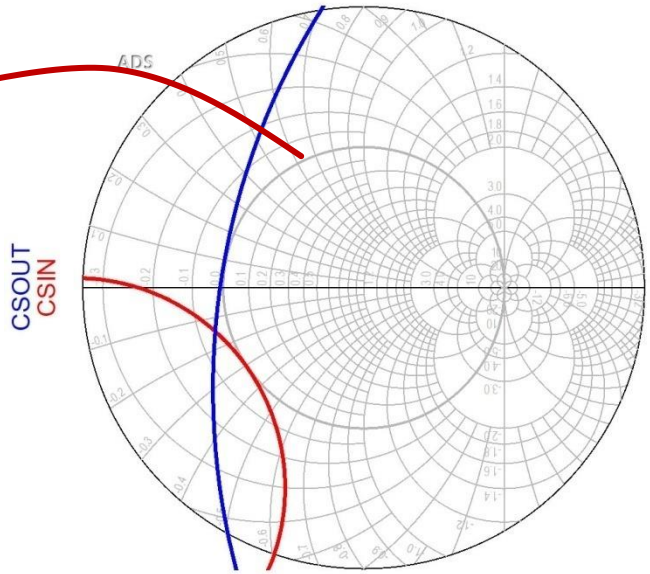

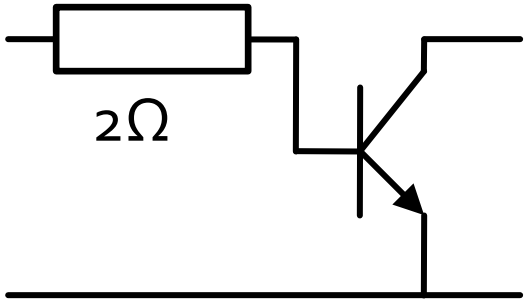

Rezistenta serie la intrare

- Rs = 2Ω
- K = 1.008, MAG = 13.694dB @ 5GHz
  - fara stabilizare, K = 0.886, MAG = 14.248dB @ 5GHz

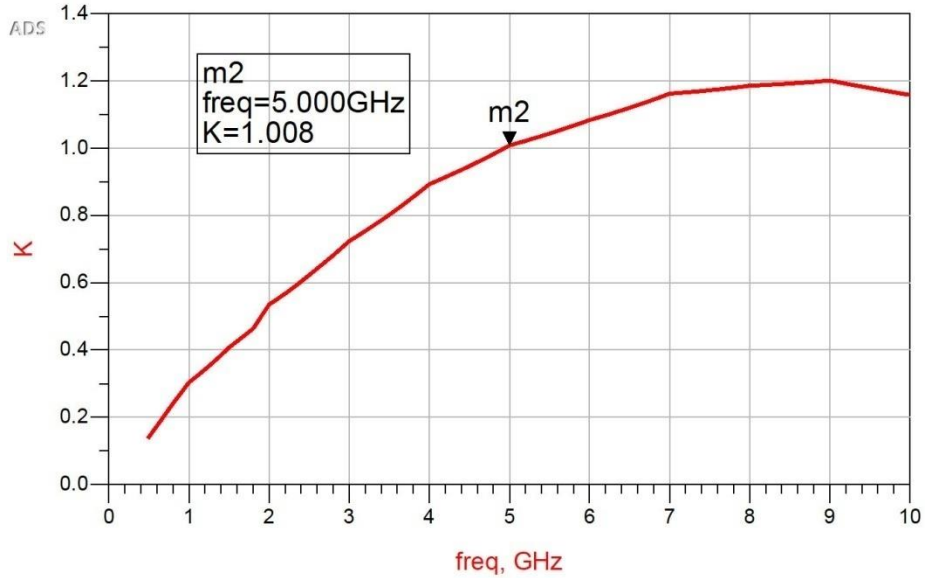

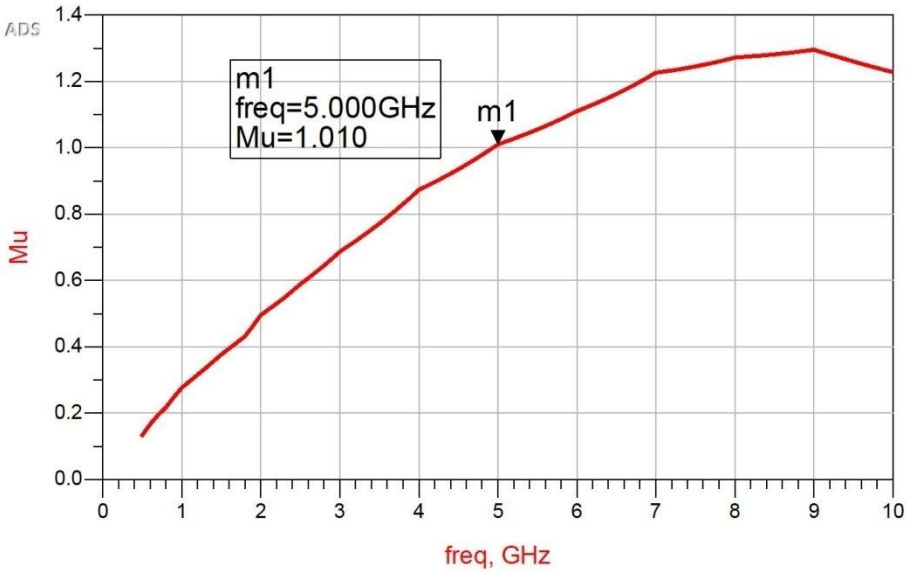

Stabilizarea unui diport

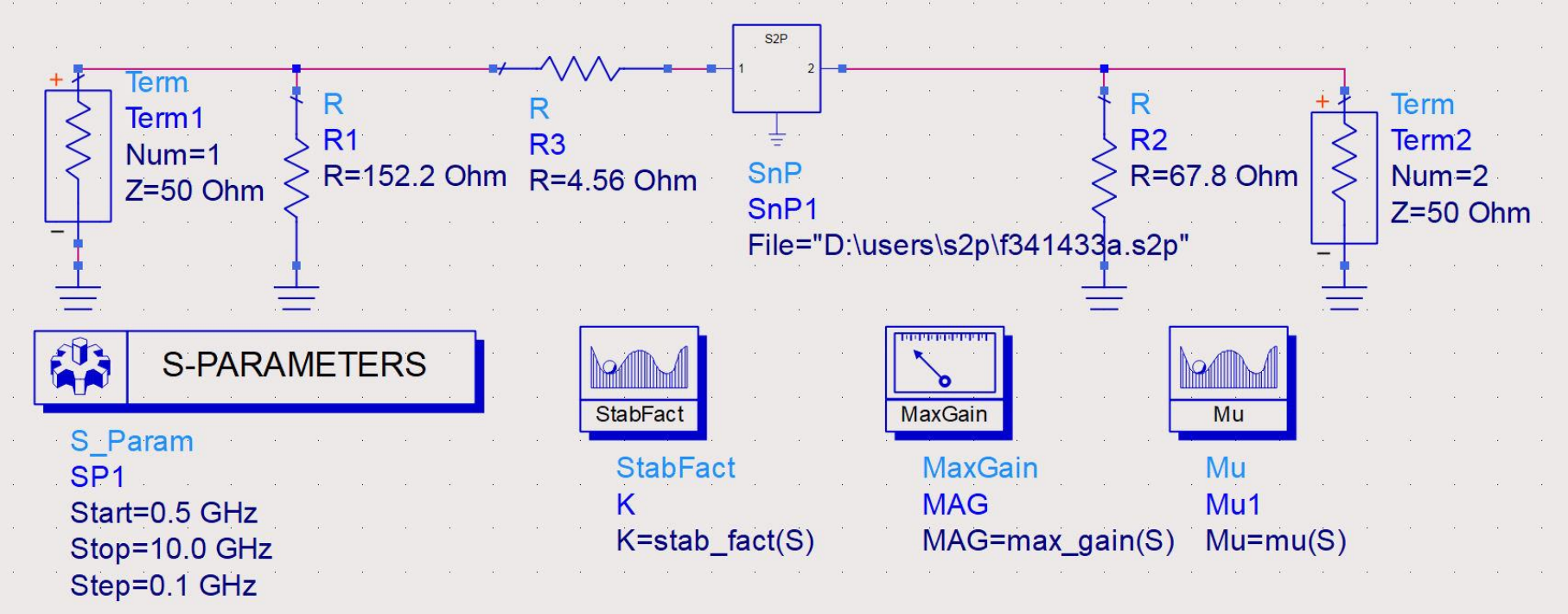

Stabilizarea unui diport

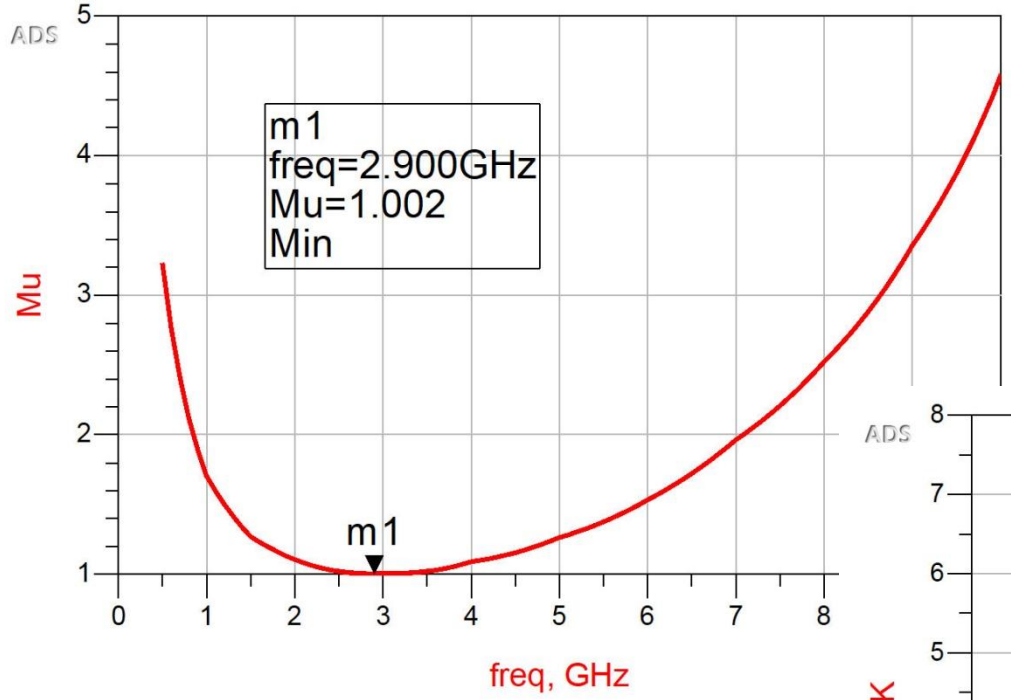

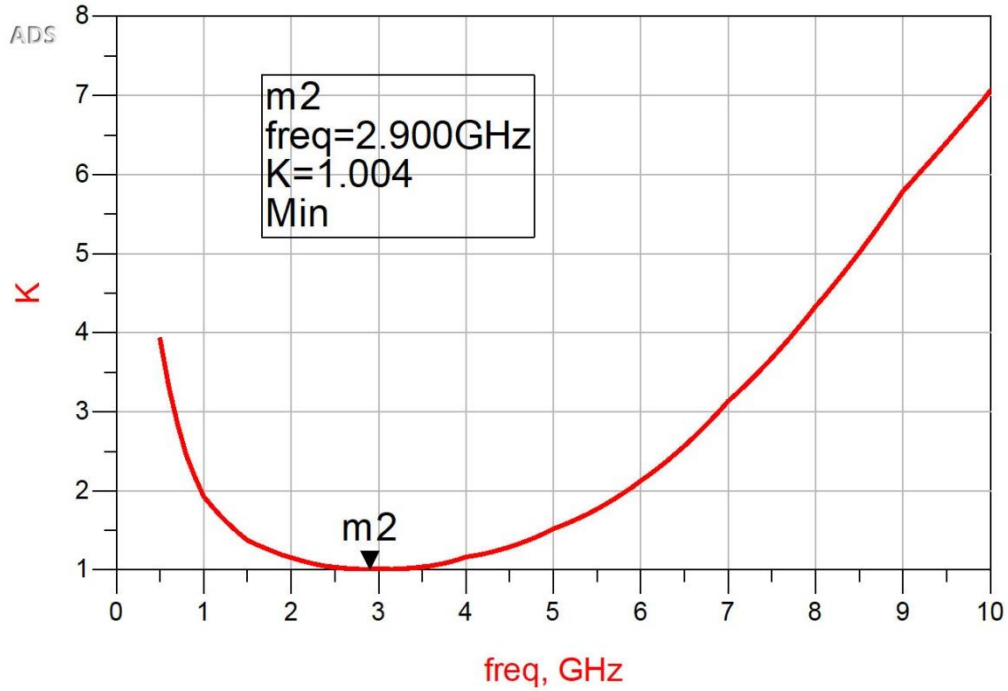

Stabilizarea unui diport

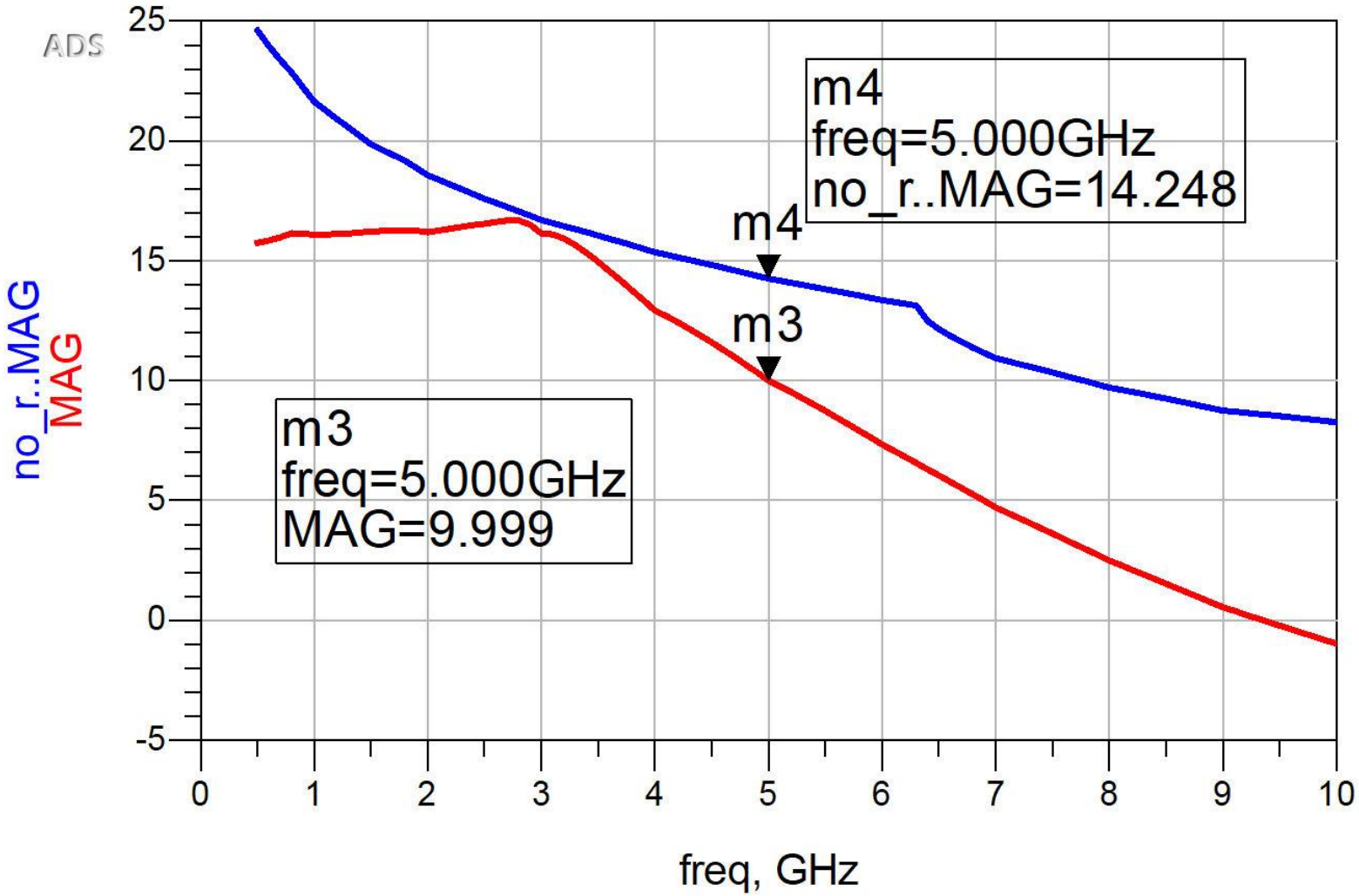

Amplificatoare de microunde

Castigul amplificatoarelor de microunde

Cuadripol Amplificator

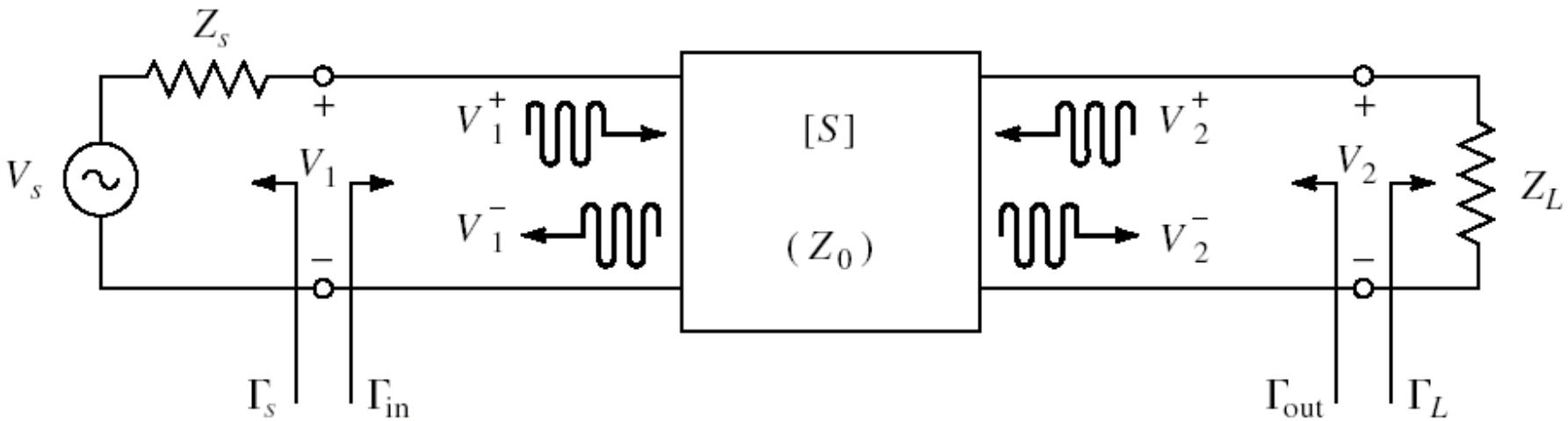

- marimi care intereseaza:
  - stabilitate
  - **castig de putere**
  - zgomot (uneori – semnal mic)
  - liniaritate (uneori – semnal mare)

Puteri / Adaptare

- Doua porturi in care adaptarea influenteaza transferul de putere

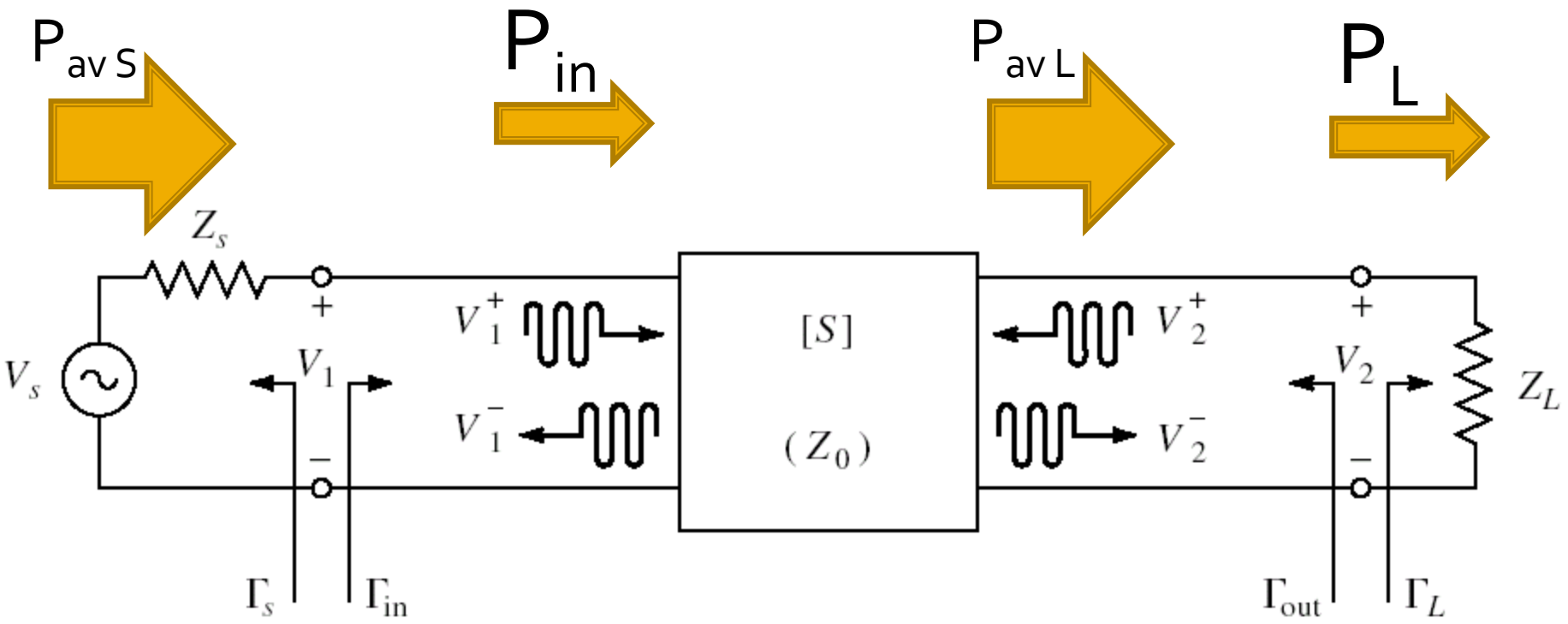

Proiectare pentru castig maxim

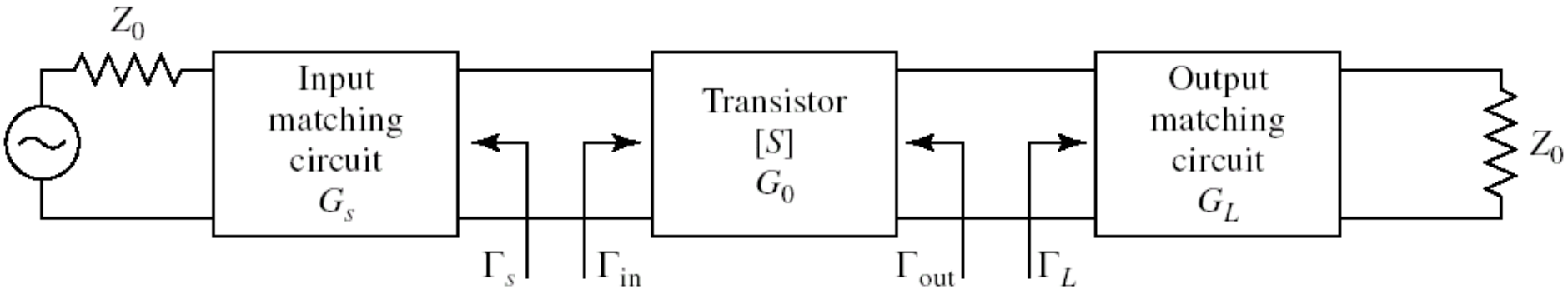

- Castig maxim de putere se obtine cand

$$\Gamma_{in} = \Gamma_S^* \qquad \Gamma_{out} = \Gamma_L^*$$

- Pentru retele de adaptare fara pierderi

$$G_{T\max} = \frac{|S_{21}|^2 \cdot \left(1-|\Gamma_S|^2\right)\cdot\left(1-|\Gamma_L|^2\right)}{|1-\Gamma_S \cdot \Gamma_{in}|^2 \cdot |1-S_{22}\cdot\Gamma_L|^2} \qquad G_{T\max} = \frac{1}{1-|\Gamma_S|^2}\cdot|S_{21}|^2 \cdot \frac{1-|\Gamma_L|^2}{|1-S_{22}\cdot\Gamma_L|^2}$$

- Pentru tranzistor bilateral (S12 ≠ 0) Γ_{in} si Γ_{out} se influenteaza reciproc deci adaptarea trebuie sa fie simultana

Adaptare simultana

- Adaptarea simultana se poate realiza **numai** pentru amplificatoarele **neconditionat stabile** la frecventa de lucru, si solutia cu |Γ|<1 se obtine cu semnul "–"

$$\Gamma_S = \frac{B_1 - \sqrt{B_1^2 - 4 \cdot |C_1|^2}}{2 \cdot C_1}$$

$$\Gamma_L = \frac{B_2 - \sqrt{B_2^2 - 4 \cdot |C_2|^2}}{2 \cdot C_2}$$

$$\begin{cases} B_1 = 1 + |S_{11}|^2 - |S_{22}|^2 - |\Delta|^2 \\ C_1 = S_{11} - \Delta \cdot S_{22}^* \end{cases}$$

$$\begin{cases} B_2 = 1 + |S_{22}|^2 - |S_{11}|^2 - |\Delta|^2 \\ C_2 = S_{22} - \Delta \cdot S_{11}^* \end{cases}$$

Castig

- ATF-34143 **at Vds=3V Id=20mA**.
- @0.5÷18GHz

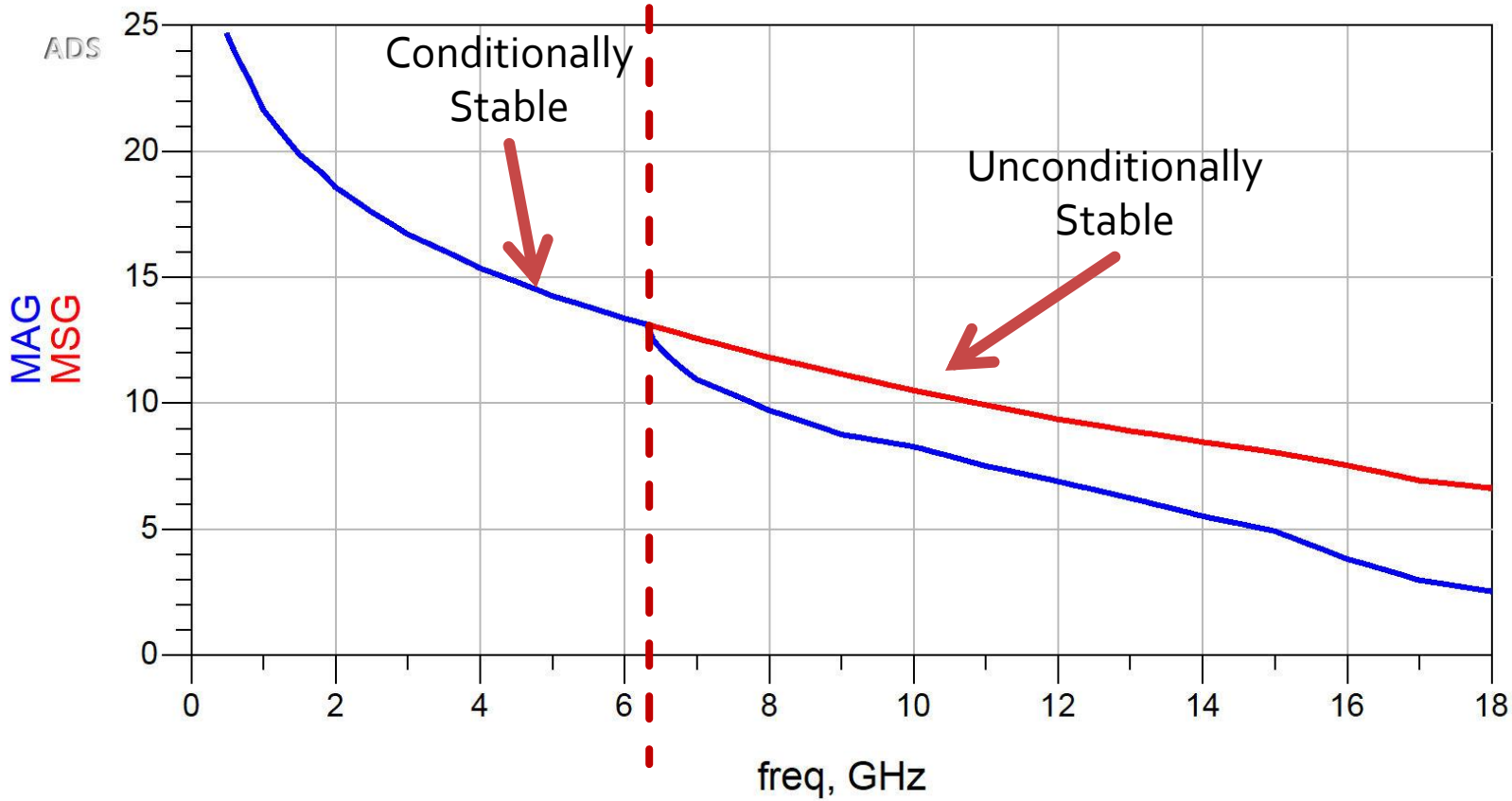

Amplificatoare de microunde

Proiectare pentru castig impus

Cuadripol Amplificator

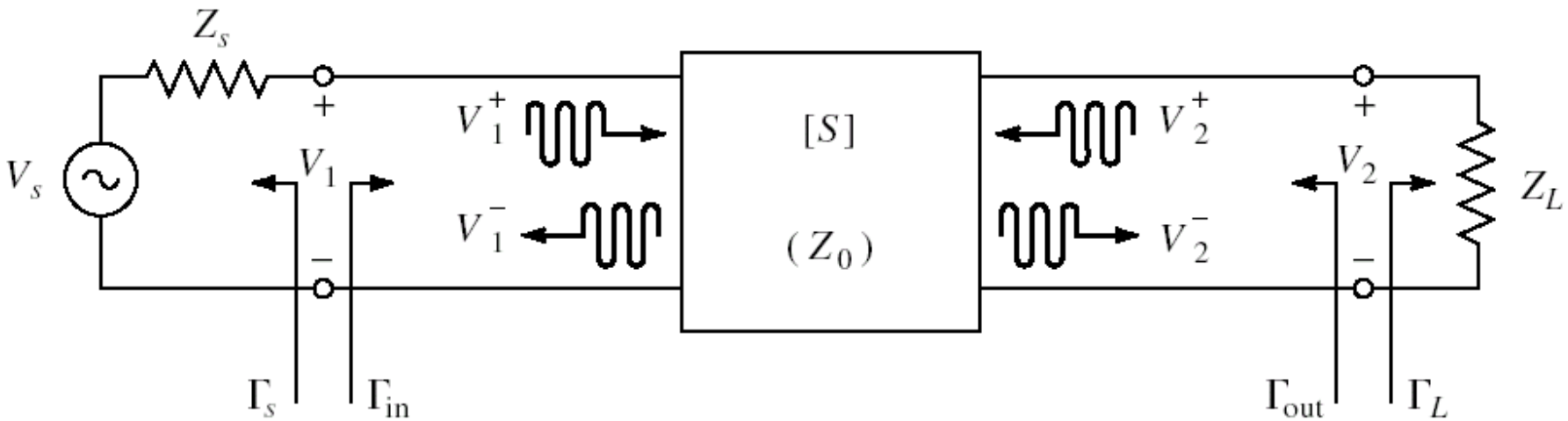

- marimi care intereseaza:
  - stabilitate
  - **castig de putere**
  - zgomot (uneori – semnal mic)
  - liniaritate (uneori – semnal mare)

Factor de merit unilateral

- Permite estimarea erorii induse de ipoteza tranzistorului unilateral

$$\boxed{S_{12} \cong 0}$$

$$\frac{1}{(1+U)^2} < \frac{G_T}{G_{TU}} < \frac{1}{(1-U)^2} \qquad U = \frac{|S_{12}| \cdot |S_{21}| \cdot |S_{11}| \cdot |S_{22}|}{\left(1-|S_{11}|^2\right) \cdot \left(1-|S_{22}|^2\right)}$$

- Se calculeaza U si abaterea maxima si minima a lui G_{TU} fata de G_T
  - aceasta abatere trebuie prevazuta in proiectare ca rezerva pentru castigul maxim

$$-20 \cdot \log(1+U) < G_T[dB] - G_{TU}[dB] < -20 \cdot \log(1-U)$$

Proiectare pentru castig impus

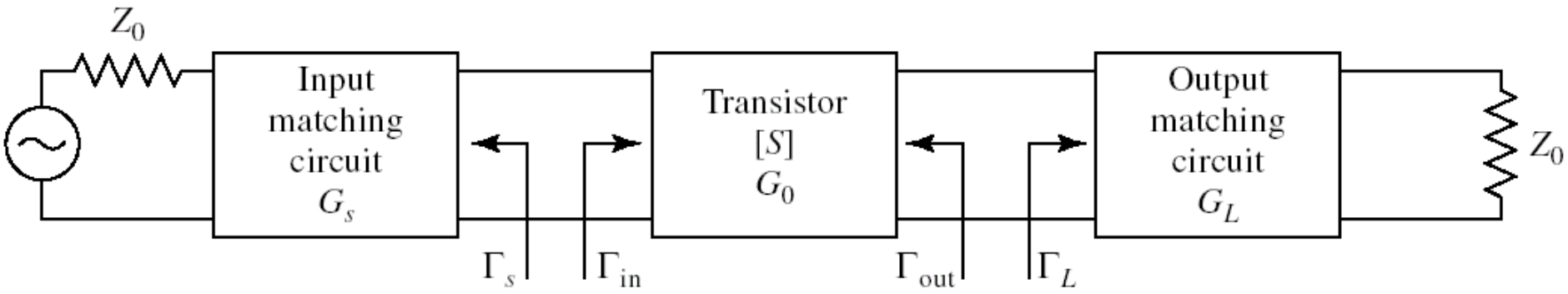

- Daca ipoteza tranzistorului unilateral este justificata:

$$G_{TU} = \frac{1-|\Gamma_S|^2}{|1-S_{11}\cdot\Gamma_S|^2}\cdot|S_{21}|^2\cdot\frac{1-|\Gamma_L|^2}{|1-S_{22}\cdot\Gamma_L|^2}$$

$$G_S = \frac{1-|\Gamma_S|^2}{|1-S_{11}\cdot\Gamma_S|^2} \qquad G_0 = |S_{21}|^2 \qquad G_L = \frac{1-|\Gamma_L|^2}{|1-S_{22}\cdot\Gamma_L|^2}$$

$$\boxed{G_S = G_S(\Gamma_S)} \qquad \boxed{G_L = G_L(\Gamma_L)}$$

Proiectare pentru castig impus

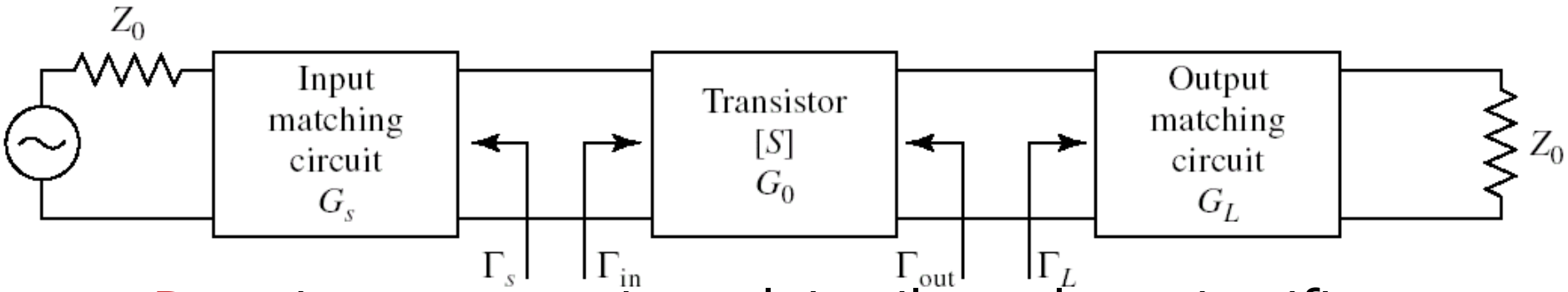

- **Daca** ipoteza tranzistorului unilateral este justificata:
  - castigul adaugat prin adaptare mai buna la intrare **nu** depinde de adaptarea la iesire $G_S = G_S(\Gamma_S)$
  - castigul adaugat prin adaptare mai buna la iesire **nu** depinde de adaptarea la intrare $G_L = G_L(\Gamma_L)$
- Adaptarile la intrare/iesire pot fi tratate independent
  - Se pot impune cerinte diferite intrare/iesire
  - se tine cont de compunerea castigurilor generate

$$G_T = G_S \cdot G_0 \cdot G_L \qquad G_T[dB] = G_S[dB] + G_0[dB] + G_L[dB]$$

Adaptarea la intrare

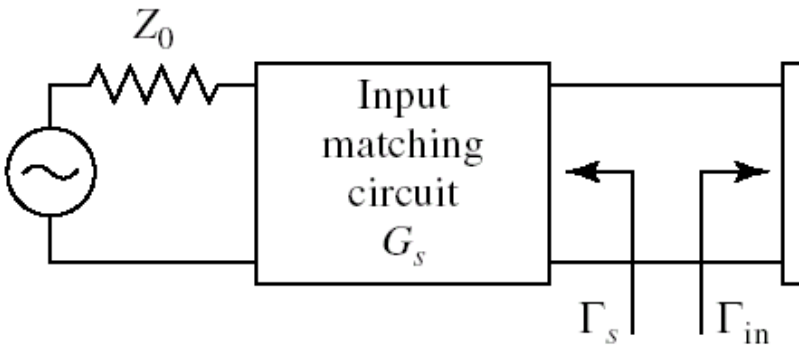

$$G_S = \frac{1-|\Gamma_S|^2}{|1-S_{11}\cdot\Gamma_S|^2}$$

- Castig maxim pentru adaptare complex conjugata (putere) la intrare

$$\Gamma_S = S_{11}^* \Rightarrow \qquad G_{S\max} = \frac{1}{1-|S_{11}|^2}$$

- Pentru oricare alta retea de adaptare

$$G_S = \frac{1-|\Gamma_S|^2}{|1-S_{11}\cdot\Gamma_S|^2} < G_{S\max} = \frac{1}{1-|S_{11}|^2}$$

Exemplu

- ATF-34143 **at Vds=3V Id=20mA**.
- @5GHz
  - S11 = 0.64∠139°
  - S12 = 0.119∠-21°
  - S21 = 3.165 ∠16°
  - S22 = 0.22 ∠146°

$$U = \frac{|S_{12}| \cdot |S_{21}| \cdot |S_{11}| \cdot |S_{22}|}{\left(1-|S_{11}|^2\right) \cdot \left(1-|S_{22}|^2\right)} = 0.094$$

$$-0.783\,dB < G_T[dB] - G_{TU}[dB] < 0.861\,dB$$

$$G_{TU\,\max} = \frac{1}{1-|S_{11}|^2} \cdot |S_{21}|^2 \cdot \frac{1}{1-|S_{22}|^2} = 17.83$$

$$G_{TU\,\max}[dB] = 12.511\,dB$$

$$G_{S\,\max} = \frac{1}{1-|S_{11}|^2} = 1.694 = 2.289\,dB$$

$G_S(\Gamma_S)$

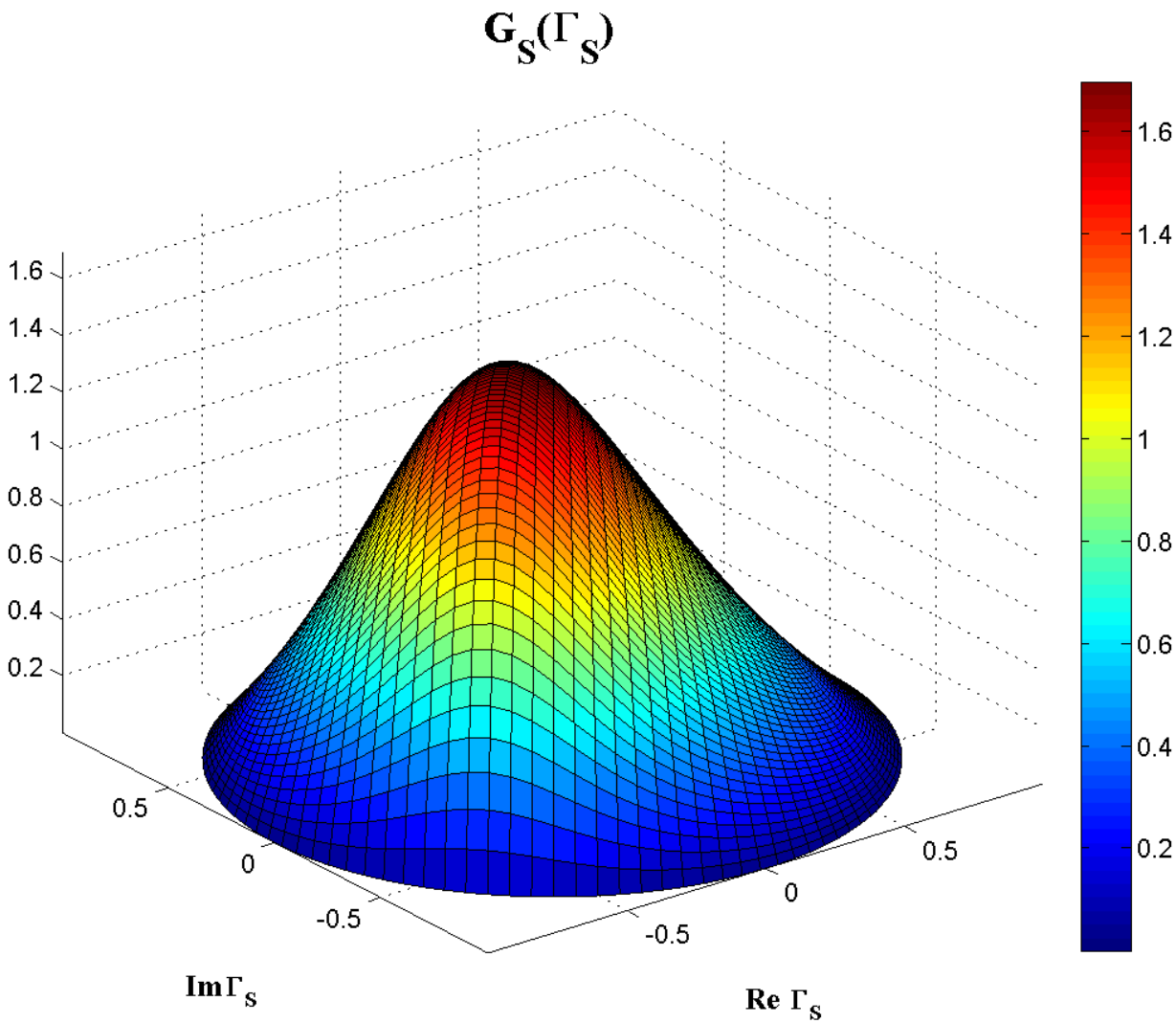

$$G_S = \frac{1-|\Gamma_S|^2}{|1-S_{11}\cdot\Gamma_S|^2}$$

Contour map/lines

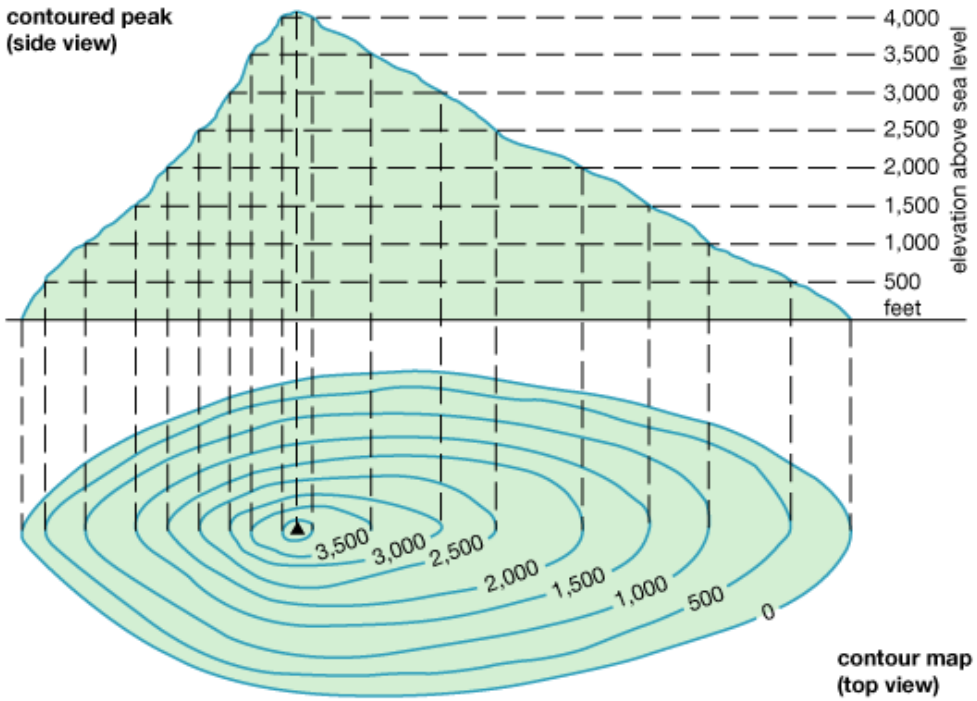

© 2011 Encyclopædia Britannica, Inc.

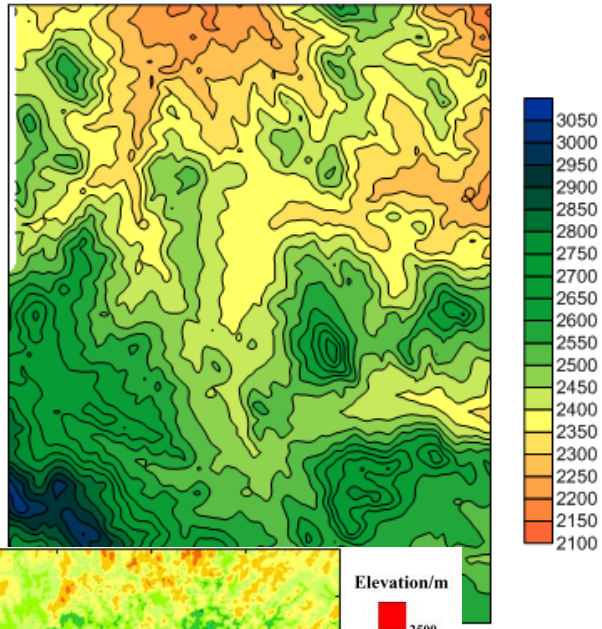

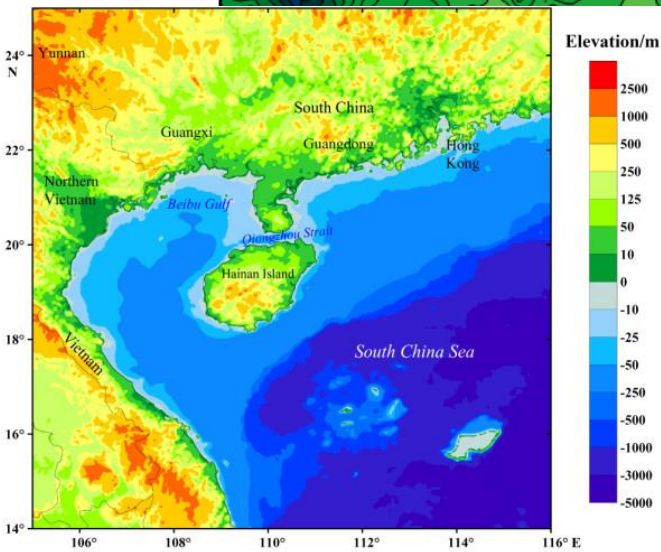

$G_S(\Gamma_S)$, nivel constant

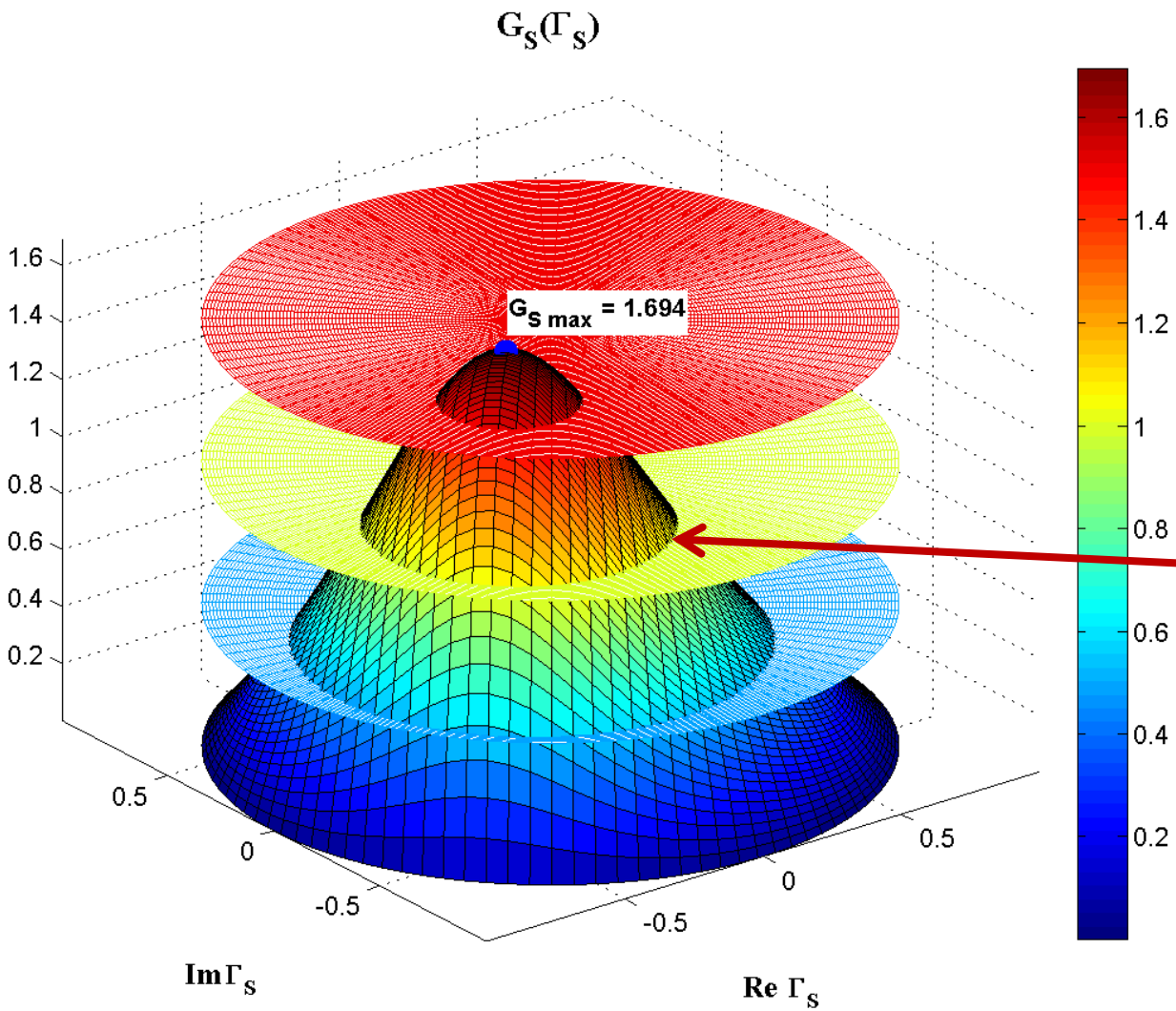

$G_S = 1.5$

$G_S = 1.0$

$G_S = 0.5$

Cercuri

$G_S(\Gamma_S)$, diagrama de nivel

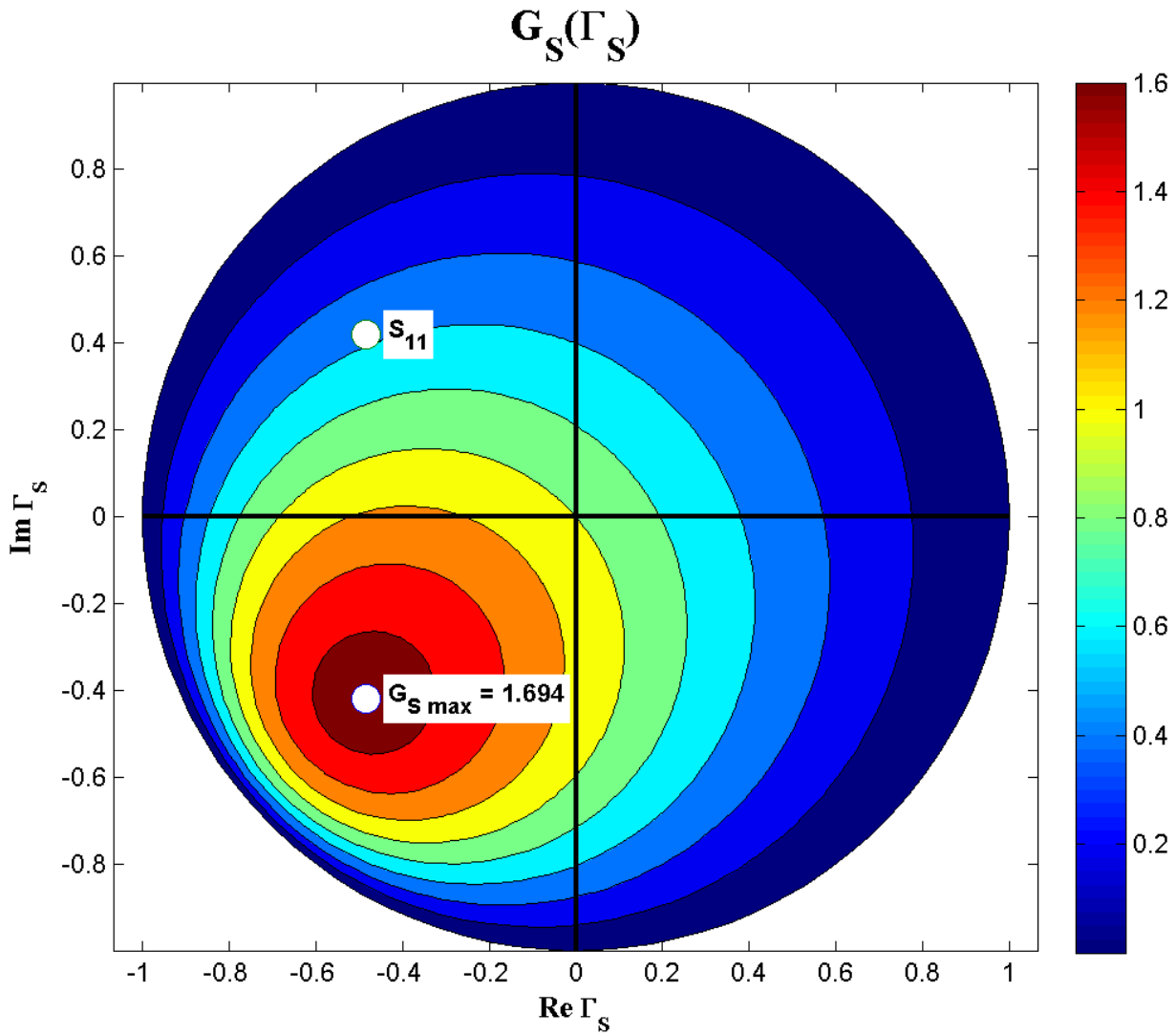

$$G_S = \frac{1-|\Gamma_S|^2}{|1-S_{11}\cdot\Gamma_S|^2}$$

$$G_{S\,\max} = G_S\big|_{\Gamma_S = S_{11}^*}$$

$G_S[dB](\Gamma_S)$, diagrama de nivel

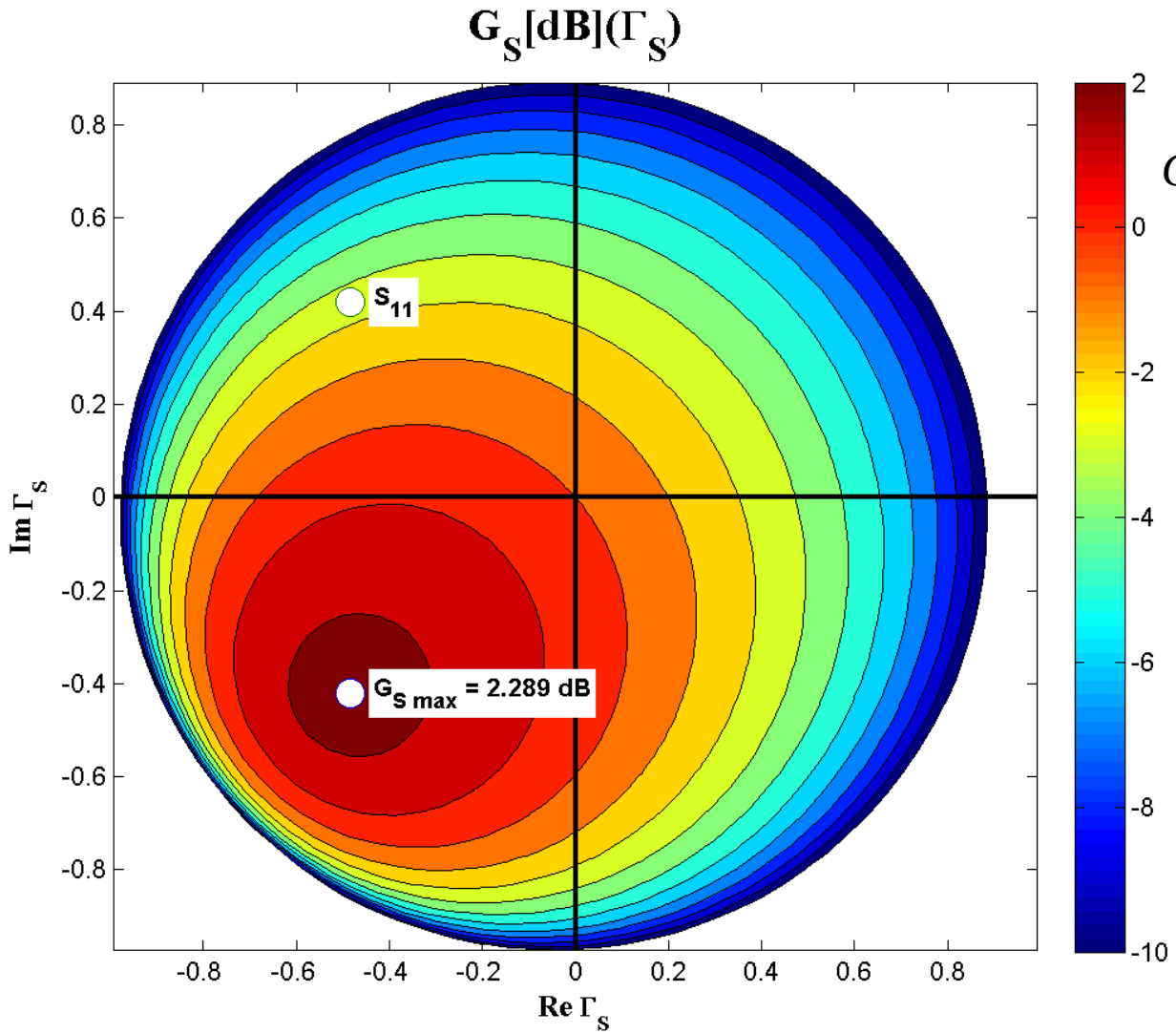

$$G_S[dB] = 10 \cdot \log\left(\frac{1-|\Gamma_S|^2}{|1-S_{11}\cdot\Gamma_S|^2}\right)$$

$$G_{S\,\max} = G_S\big|_{\Gamma_S = S_{11}^*}$$

Cercuri de castig constant la intrare

- Castig normat (coordonate liniare)

$$g_S = \frac{G_S}{G_{S\max}} = \frac{1-|\Gamma_S|^2}{|1-S_{11}\cdot\Gamma_S|^2}\cdot\left(1-|S_{11}|^2\right)<1$$

- Punctele de nivel constant, pentru un g_s<1 fixat

$$g_S\cdot|1-S_{11}\cdot\Gamma_S|^2 = \left(1-|\Gamma_S|^2\right)\cdot\left(1-|S_{11}|^2\right)$$

$$\left(g_S\cdot|S_{11}|^2+1-|S_{11}|^2\right)\cdot|\Gamma_S|^2 - g_S\cdot\left(S_{11}\cdot\Gamma_S+S_{11}^*\cdot\Gamma_S^*\right)=1-|S_{11}|^2-g_S$$

$$\Gamma_S\cdot\Gamma_S^* - \frac{g_S\cdot\left(S_{11}\cdot\Gamma_S+S_{11}^*\cdot\Gamma_S^*\right)}{1-(1-g_S)\cdot|S_{11}|^2} = \frac{1-|S_{11}|^2-g_S}{1-(1-g_S)\cdot|S_{11}|^2} \Big/ + \frac{g_S^2\cdot|S_{11}|^2}{\left[1-(1-g_S)\cdot|S_{11}|^2\right]^2}$$

Cercuri de castig constant la intrare

$$\left|\Gamma_S - \frac{g_S \cdot S_{11}^*}{1-(1-g_S)\cdot|S_{11}|^2}\right| = \frac{\sqrt{1-g_S}\cdot\left(1-|S_{11}|^2\right)}{1-(1-g_S)\cdot|S_{11}|^2} \qquad |\Gamma_S - C_S| = R_S$$

$$C_S = \frac{g_S \cdot S_{11}^*}{1-(1-g_S)\cdot|S_{11}|^2} \qquad R_S = \frac{\sqrt{1-g_S}\cdot\left(1-|S_{11}|^2\right)}{1-(1-g_S)\cdot|S_{11}|^2}$$

- Ecuatia unui cerc in planul complex in care reprezint Γ_S
- **Interpretare**: Orice punct Γ_S care reprezentat in planul complex se gaseste **pe** cercul desenat pentru $g_{cerc} = G_{cerc}/G_{Smax}$ va conduce la obtinerea castigului $G_S = G_{cerc}$
  - Orice punct **in exteriorul** acestui cerc va genera un castig $G_S < G_{cerc}$
  - Orice punct **in interiorul** acestui cerc va genera un castig $G_S > G_{cerc}$

Cercuri de castig constant la intrare

$$C_S = \frac{g_S \cdot S_{11}^*}{1-(1-g_S)\cdot|S_{11}|^2} \qquad R_S = \frac{\sqrt{1-g_S}\cdot\left(1-|S_{11}|^2\right)}{1-(1-g_S)\cdot|S_{11}|^2}$$

- Centrele cercurilor se gasesc pe segmentul care uneste $\Gamma_S = S_{11}^*$ cu centrul diagramei Smith
- Cercurile se traseaza (traditional, CAD) in **coordonate logaritmice** ([dB])
  - relatiile de calcul sunt in coordonate **liniare !**
- Cercul corespunzator lui G_S = 0 dB trece prin origine

Cercuri de castig constant la iesire

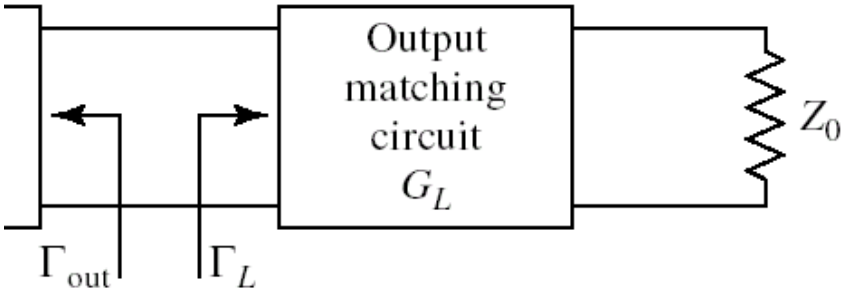

$$G_L = \frac{1-|\Gamma_L|^2}{|1-S_{22}\cdot\Gamma_L|^2}$$

- Castig maxim $\Gamma_L = S_{22}^* \Rightarrow$ $G_{L\max} = \dfrac{1}{1-|S_{22}|^2}$

$$g_L = \frac{G_L}{G_{L\max}} = \frac{1-|\Gamma_L|^2}{|1-S_{22}\cdot\Gamma_L|^2}\cdot\left(1-|S_{22}|^2\right) < 1$$

- Calcul similar

$$C_L = \frac{g_L\cdot S_{22}^*}{1-(1-g_L)\cdot|S_{22}|^2} \qquad R_L = \frac{\sqrt{1-g_L}\cdot\left(1-|S_{22}|^2\right)}{1-(1-g_L)\cdot|S_{22}|^2}$$

- Exemplu

$$G_{L\max} = \frac{1}{1-|S_{22}|^2} = 1.051 = 0.215\ dB$$

$G_L(\Gamma_L)$

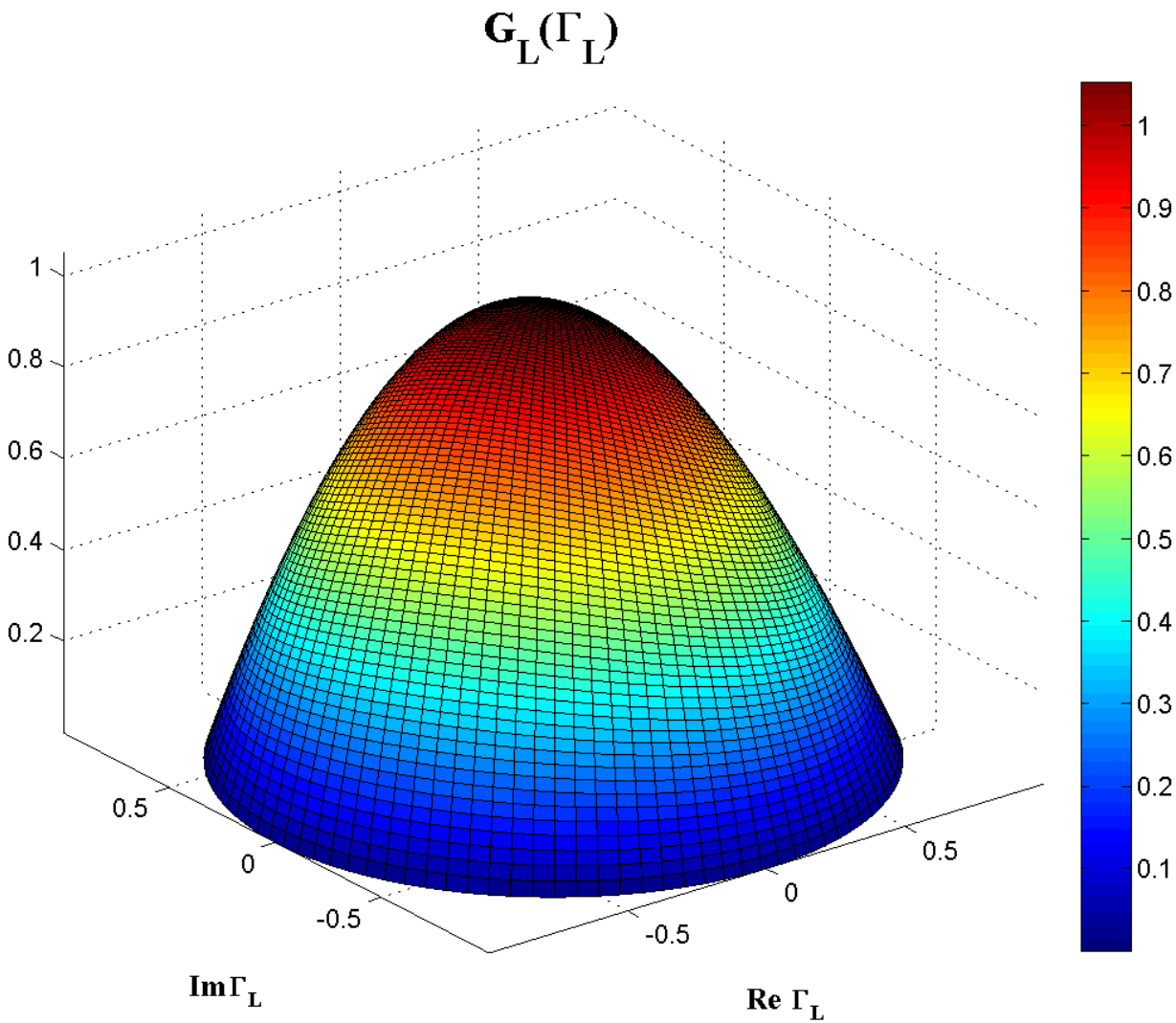

$$G_L = \frac{1-|\Gamma_L|^2}{|1-S_{22}\cdot\Gamma_L|^2}$$

$G_L(\Gamma_L)$, diagrama de nivel

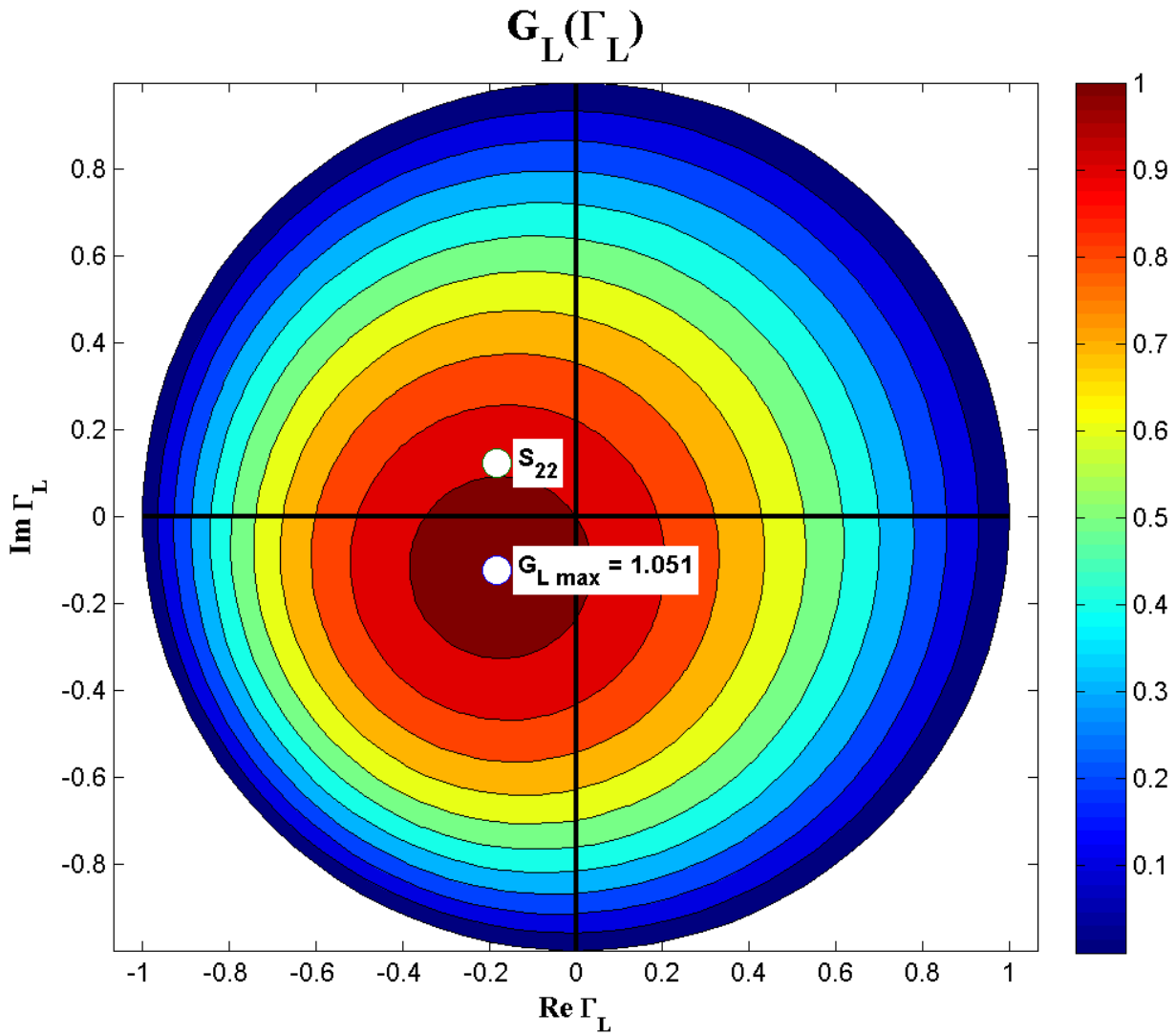

$$G_L = \frac{1-|\Gamma_L|^2}{|1-S_{22}\cdot\Gamma_L|^2}$$

$$G_{L\max} = G_L\big|_{\Gamma_L = S_{22}^*}$$

$G_L[dB](\Gamma_L)$, diagrama de nivel

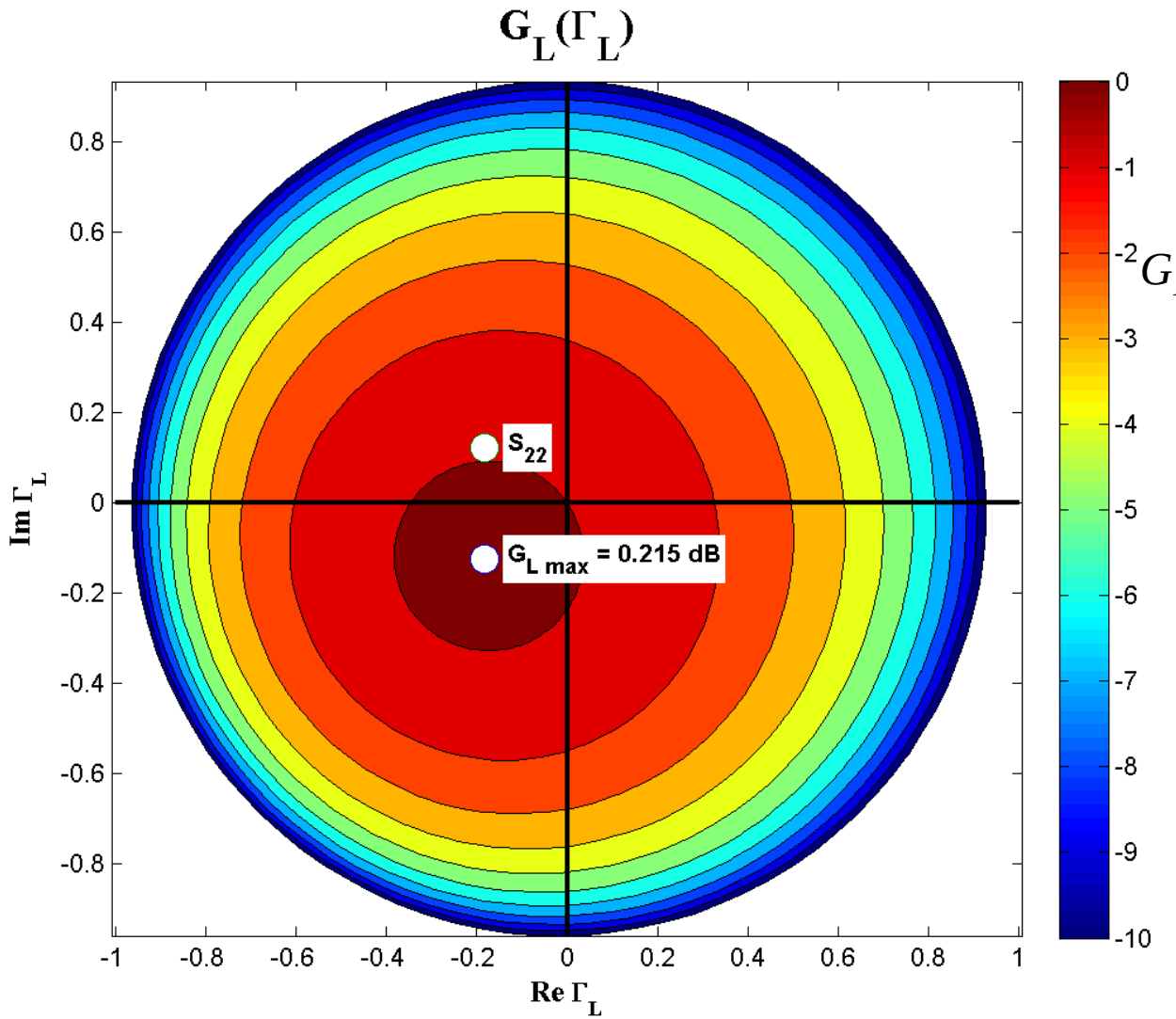

$$G_L[dB] = 10 \cdot \log\left(\frac{1-|\Gamma_L|^2}{|1-S_{22}\cdot\Gamma_L|^2}\right)$$

$$G_{L\max} = G_L\big|_{\Gamma_L = S_{22}^*}$$

ADS

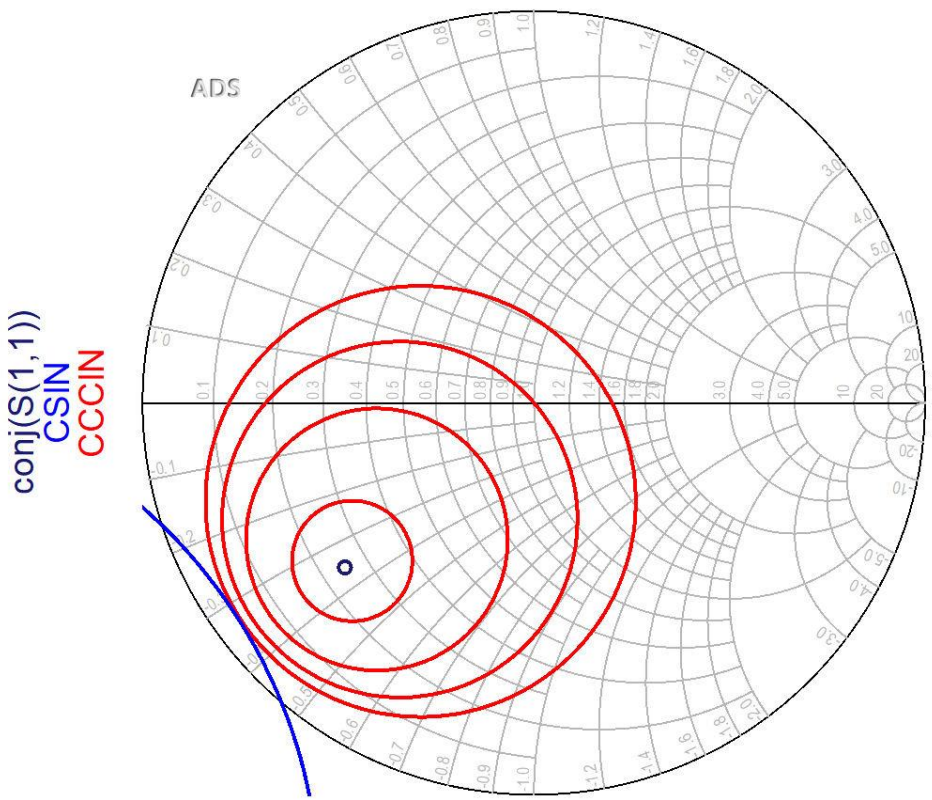

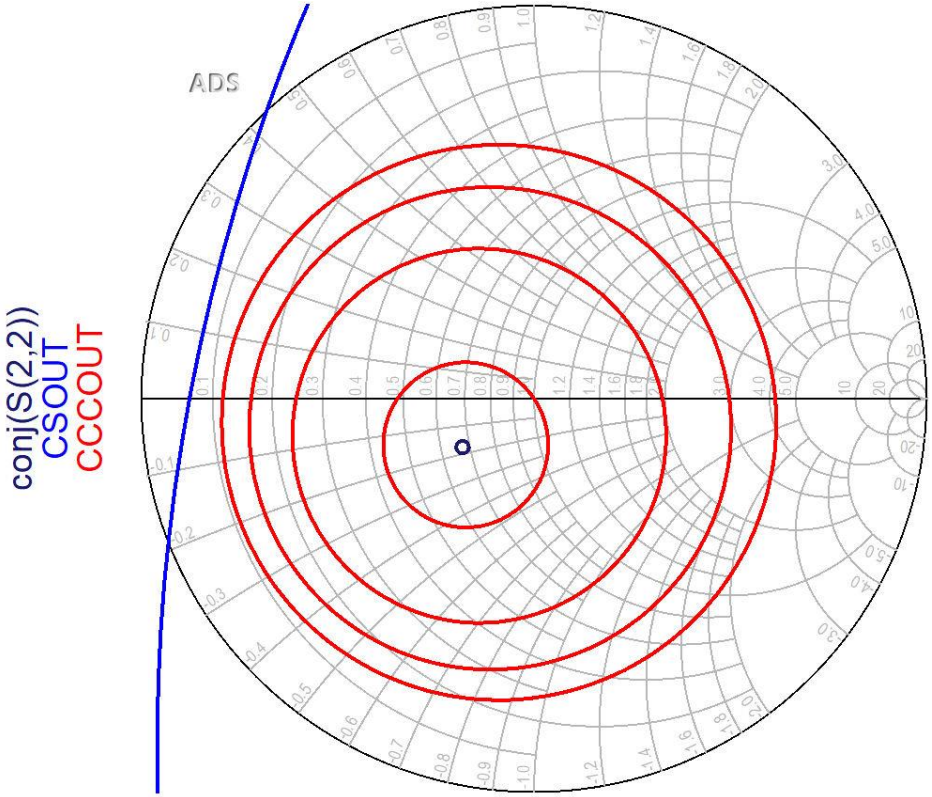

- Cercurile se reprezinta pentru valorile cerute in dB
- Este utila calcularea G_{Smax} si G_{Lmax} anterior

Proiectare pentru castig impus

- Se calculeaza G_o, G_{Smax} , G_{Lmax}
- Pentru obtinerea castigului impus se **aleg** valorile suplimentare necesare (suplimentar la G_o)
  - se tine cont de abaterea caracterizata de factorul de merit U

$$G_{dorit}[dB] = G_{S\_dor}[dB] + G_0[dB] + G_{L\_dor}[dB]$$

- Se reprezinta cercurile de castig pentru valorile alese G_{S_dor} , G_{L_dor}
- Se proiecteaza retelele de adaptare care muta coeficientul de reflexie **pe** sau **in interiorul** cercurilor dorite (in functie de aplicatie)

Amplificatoare de microunde

Proiectare pentru zgomot redus

Cuadripol Amplificator

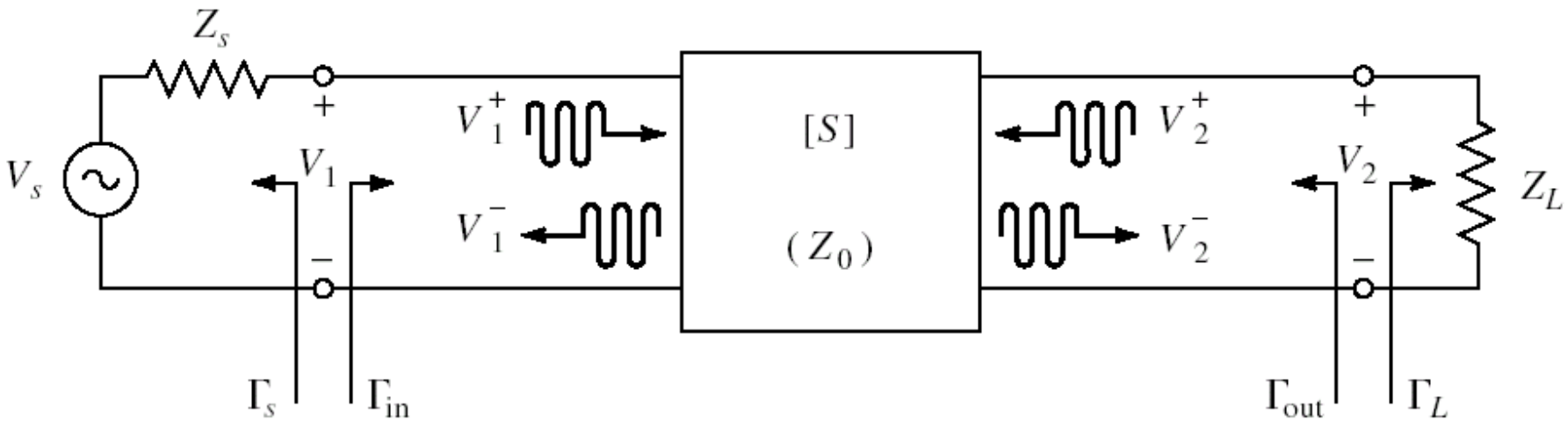

- marimi care intereseaza:
  - stabilitate
  - castig de putere
  - **zgomot (uneori – semnal mic)**
  - liniaritate (uneori – semnal mare)

Zgomot

- Zgomot: variatii aleatorii ale semnalului

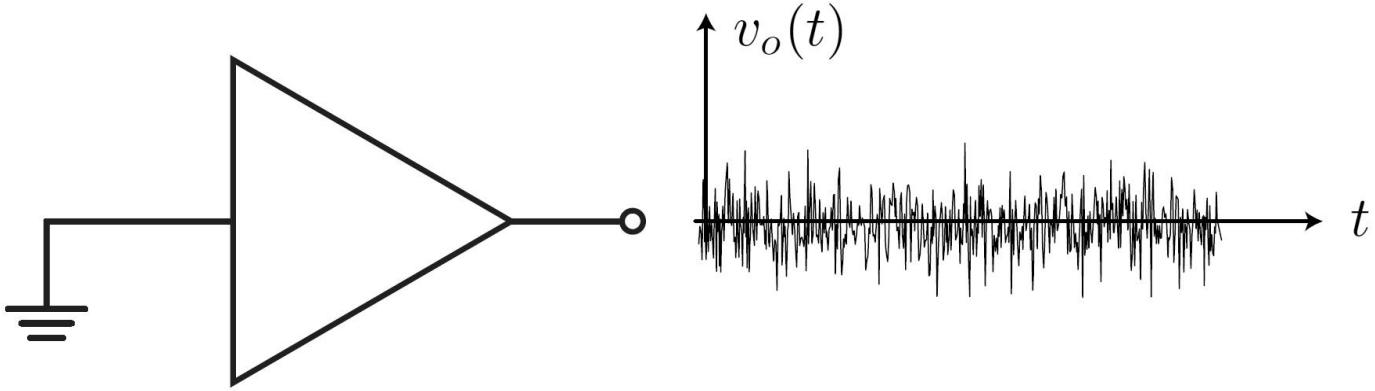

$$\overline{v_n(t)} = \langle v_n(t) \rangle = \frac{1}{T}\int_0^T v_n(t)\,dt = 0$$

$$\overline{v_n^2(t)} = \langle v_n^2(t) \rangle = \frac{1}{T}\int_0^T v_n^2(t)\,dt \neq 0 \qquad V_{n(ef)} = \sqrt{\overline{v_n^2(t)}}$$

Zgomot

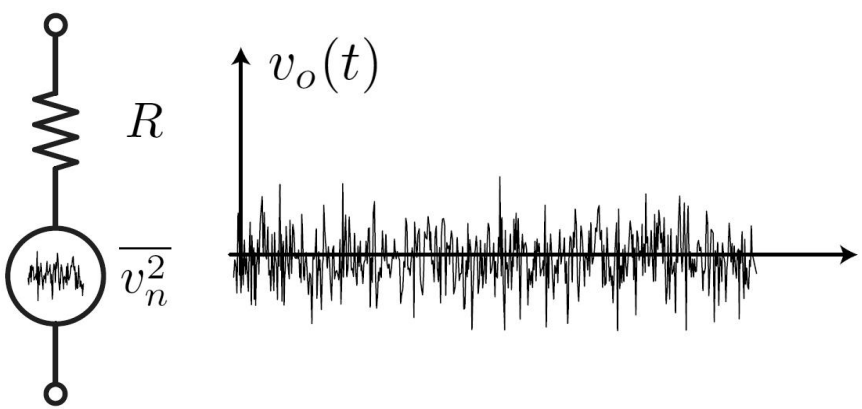

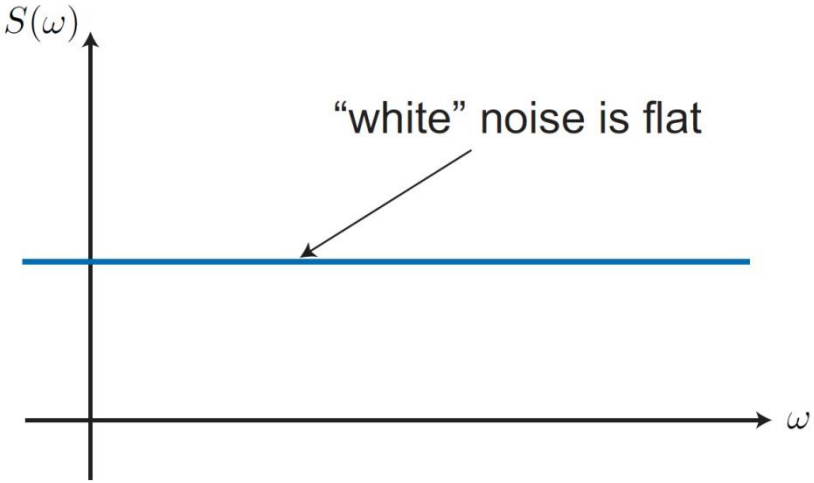

- tensiunea efectiva de zgomot

$$V_{n(ef)} = \sqrt{4kTBR}$$

- puterea disponibila de zgomot (furnizata restului circuitului - maxim)

$$P_n = kTB$$

Factor de zgomot

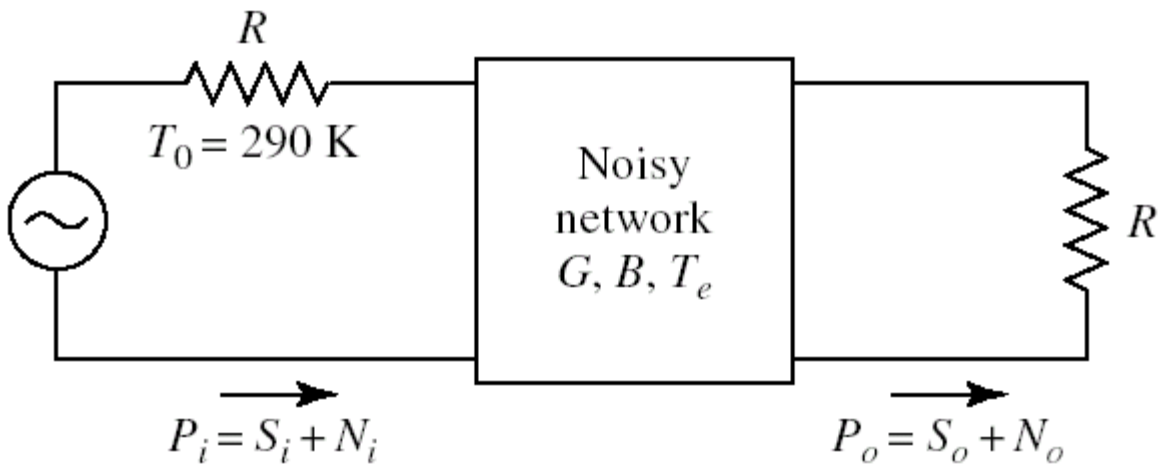

- Factorul de zgomot F caracterizeaza degradarea raportului semnal/zgomot intre intrarea si iesirea unei componente, cand la intrare se aplica o putere de zgomot de referinta (T_o = 290K)

$$F = \left. \frac{S_i / N_i}{S_o / N_o} \right|_{T_0 = 290K}$$

$$V_{n(ef)} = \sqrt{4kTBR}$$

$$P_n = kTB$$

Factor de zgomot

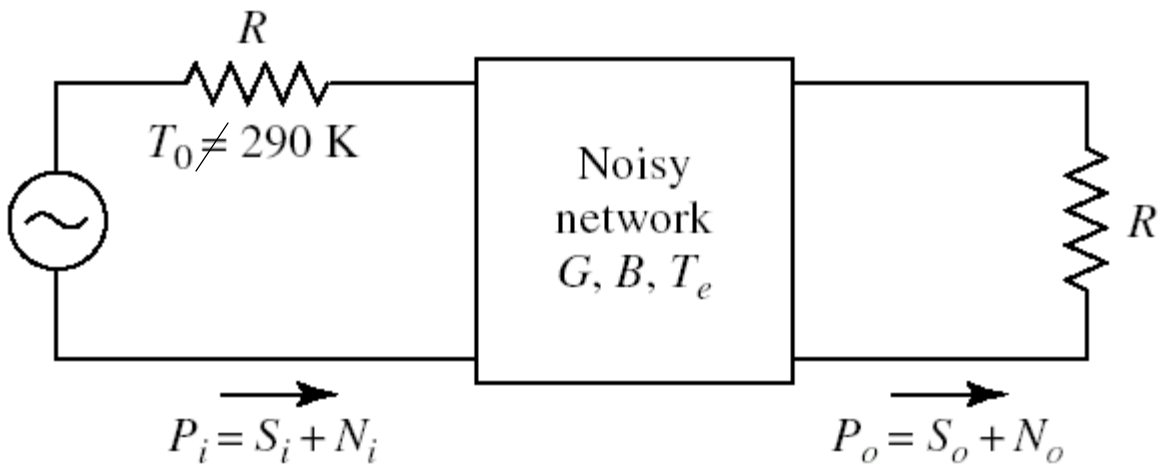

- Factorul de zgomot F **nu** caracterizeaza direct degradarea raportului semnal/zgomot intre intrarea si iesirea unei componente, cand la intrare se aplica o putere de zgomot diferita de cea de referinta

$$F \neq \left. \frac{S_i / N_i}{S_o / N_o} \right|_{T_0 \neq 290K}$$

Factor de zgomot

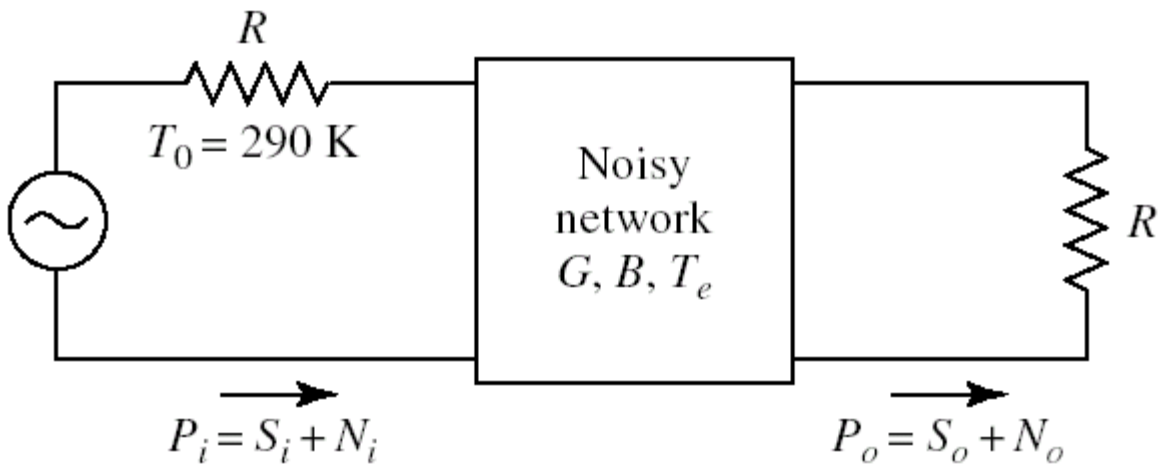

- In general, puterea de zgomot la iesire se obtine cu doua componente:
  - o putere datorata zgomotului de intrare amplificat cu castigul G (depinde de puterea de zgomot de la intrare)
  - o putere de zgomot generata intern de dispozitiv (care **nu** depinde de puterea de zgomot de la intrare)

Factor de zgomot

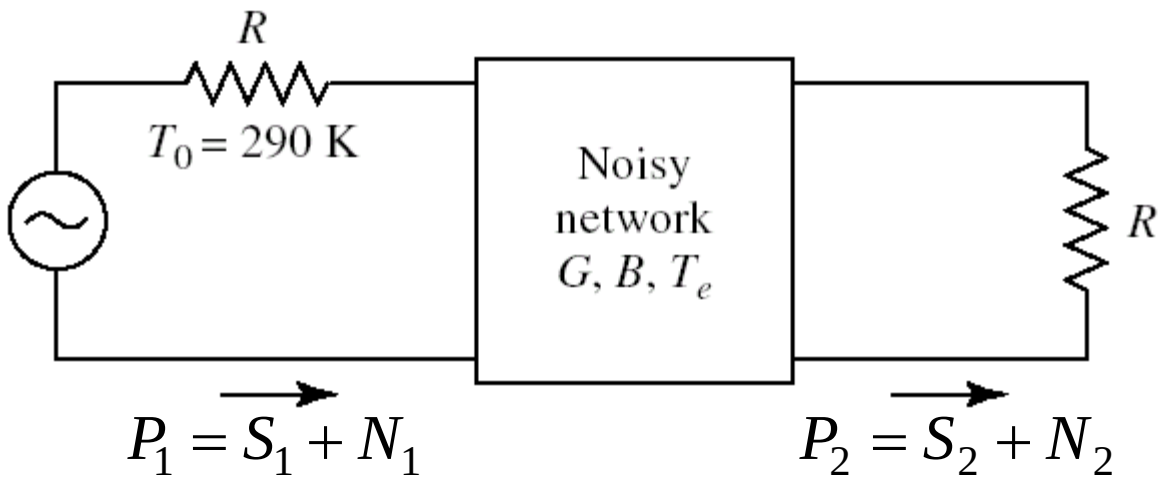

- Estimarea puterii de zgomot adaugate se poate face plecand de la definitia factorului de zgomot:

$$F = \left.\frac{S_1/N_1}{S_2/N_2}\right|_{T_0=290K,\,N_1=N_0}$$

$$N_2 = F \cdot N_0 \cdot \frac{S_2}{S_1} = F \cdot N_0 \cdot G$$

$$N_2 = N_0 \cdot G + (F-1) \cdot N_0 \cdot G$$

Factor de zgomot

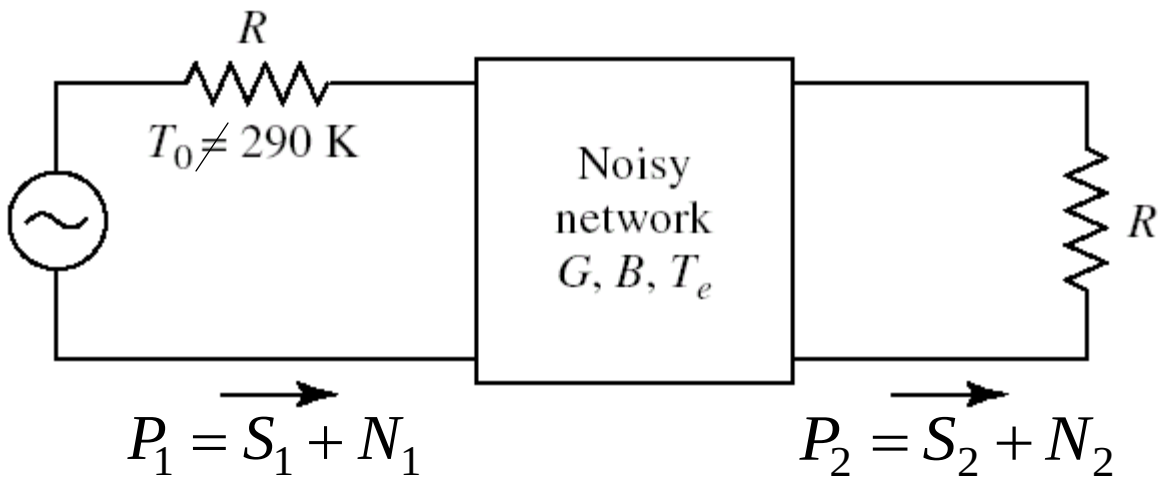

- Se identifica cei doi termeni:
  - zgomotul de intrare amplificat
  - zgomotul adaugat intern
- Pentru o situatie in care la intrare nu am zgomotul de referinta (N1 ≠ No)

$$N_2 = N_0 \cdot G + (F-1) \cdot N_0 \cdot G$$

$$N_2 = N_1 \cdot G + (F-1) \cdot N_0 \cdot G$$

Factor de zgomot al circutelor cascadate

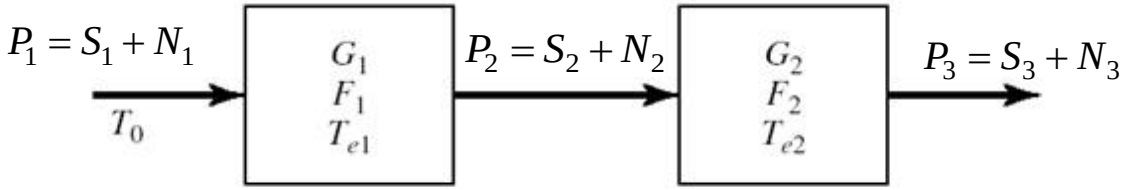

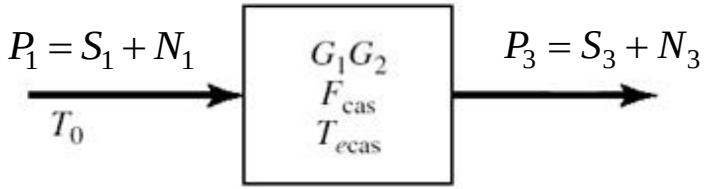

$$N_2 = N_1 \cdot G_1 + (F_1 - 1) \cdot N_0 \cdot G_1$$

$$N_3 = N_2 \cdot G_2 + (F_2 - 1) \cdot N_0 \cdot G_2$$

$$G_{cas} = G_1 \cdot G_2$$

$$N_3 = N_1 \cdot G_{cas} + (F_{cas} - 1) \cdot N_0 \cdot G_{cas}$$

$$N_3 = [N_1 \cdot G_1 + (F_1 - 1) \cdot N_0 \cdot G_1] \cdot G_2 + (F_2 - 1) \cdot N_0 \cdot G_2$$

$$N_3 = N_1 \cdot G_1 \cdot G_2 + (F_1 - 1) \cdot N_0 \cdot G_1 \cdot G_2 + (F_2 - 1) \cdot N_0 \cdot G_2$$

Factor de zgomot al circutelor cascadate

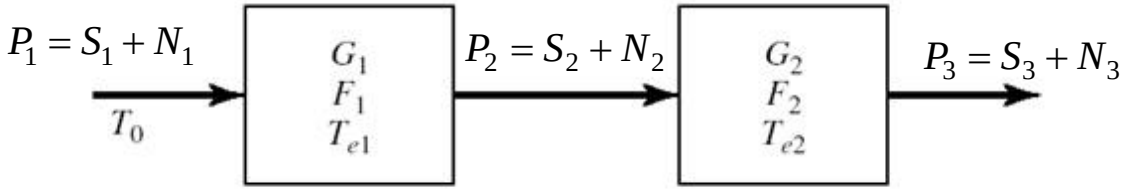

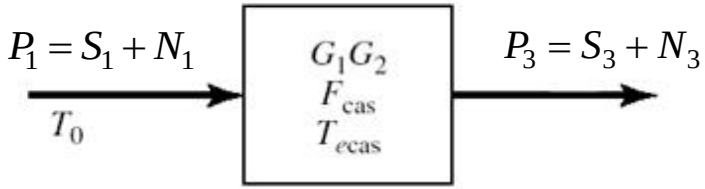

$$N_3 = N_1 \cdot G_1 \cdot G_2 + (F_1 - 1) \cdot N_0 \cdot G_1 \cdot G_2 + (F_2 - 1) \cdot N_0 \cdot G_2$$

$$G_{cas} = G_1 \cdot G_2 \qquad N_3 = N_1 \cdot G_{cas} + (F_{cas} - 1) \cdot N_0 \cdot G_{cas}$$

$$(F_1 - 1) \cdot N_0 \cdot G_1 \cdot G_2 + (F_2 - 1) \cdot N_0 \cdot G_2 = (F_{cas} - 1) \cdot N_0 \cdot G_1 \cdot G_2$$

$$F_{cas} = F_1 + \frac{1}{G_1}(F_2 - 1)$$

Factor de zgomot al circutelor cascadate

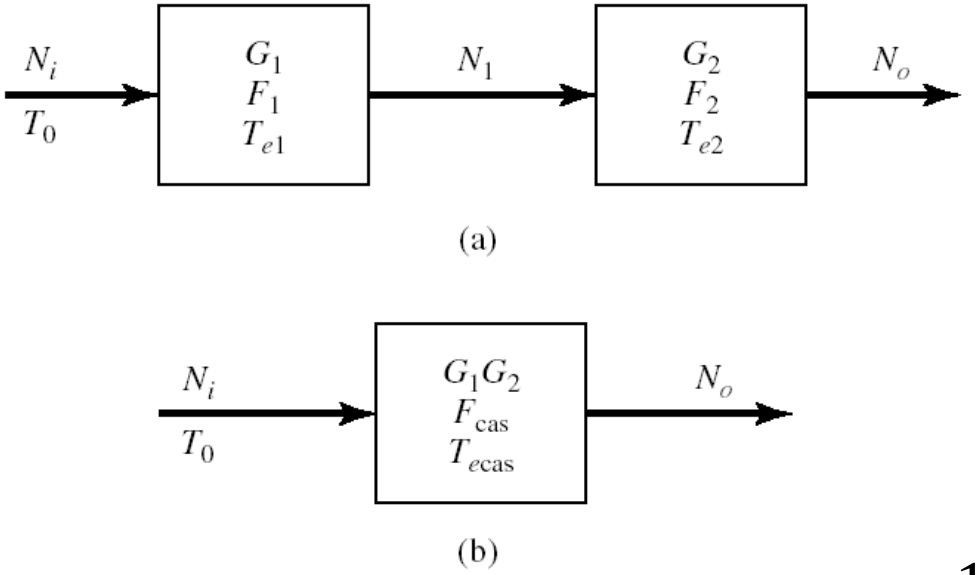

$$G_{cas} = G_1 \cdot G_2 \qquad F_{cas} = F_1 + \frac{1}{G_1}(F_2 - 1)$$

- Ecuatia Friis (**!coordonate liniare**)

$$F_{cas} = F_1 + \frac{F_2 - 1}{G_1} + \frac{F_3 - 1}{G_1 \cdot G_2} + \frac{F_4 - 1}{G_1 \cdot G_2 \cdot G_3} + \cdots$$

Formula lui Friis (zgomot)

$$F_{cas} = F_1 + \frac{F_2 - 1}{G_1} + \frac{F_3 - 1}{G_1 \cdot G_2} + \frac{F_4 - 1}{G_1 \cdot G_2 \cdot G_3} + \cdots$$

- Formula lui Friis arata ca
  - zgomotul unor circuite in cascada este in mare parte determinat de circuitul de la intrare
  - zgomotul introdus de celelalte circuite este redus
    - -1
    - impartire la G (de obicei supraunitar)

Formula lui Friis (zgomot)

$$F_{cas} = F_1 + \frac{F_2 - 1}{G_1} + \frac{F_3 - 1}{G_1 \cdot G_2} + \frac{F_4 - 1}{G_1 \cdot G_2 \cdot G_3} + \cdots$$

- Formula lui Friis, efecte:
- in amplificatoare multietaj:
  - e esential ca primul etaj de amplificare sa fie nezgomotos, chiar cu sacrificarea in parte a castigului
  - urmatoarele etaje pot fi optimizate pentru castig
- pentru un singur amplificator:
  - la intrare e important sa introducem elemente nezgomotoase (reactive, linii fara pierderi)
  - circuitul de adaptare la iesire are o influenta mai mica (zgomotul este generat intr-un punct in care semnalul este deja amplificat de tranzistor)

$$V_{n(ef)} = \sqrt{4kTBR} \qquad P_n = kTB$$

Zgomotul amplificatoarelor dezadaptate

- Un amplificator dezadaptat la intrare ($\Gamma \neq 0$)

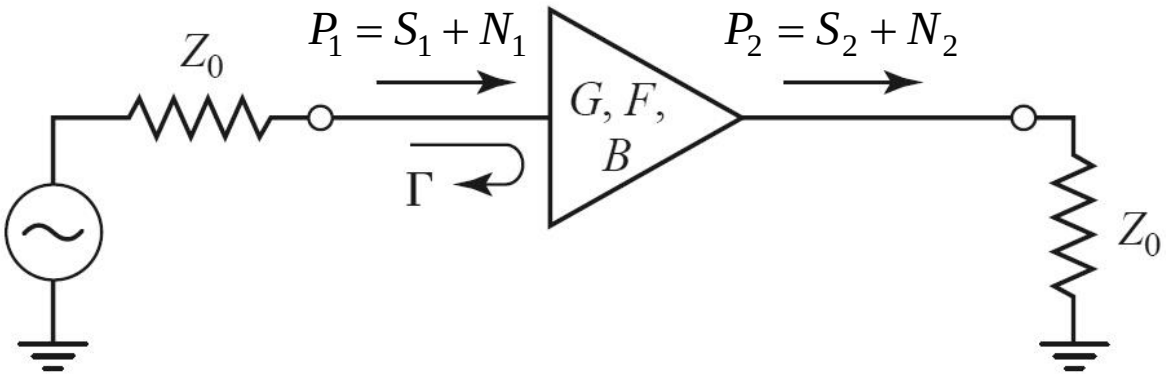

$$G_{ech} = G \cdot \left(1 - |\Gamma|^2\right)$$

$$N_2 = N_1 \cdot G \cdot \left(1 - |\Gamma|^2\right) + (F - 1) \cdot N_0 \cdot G = N_1 \cdot G \cdot \left(1 - |\Gamma|^2\right) + \frac{F - 1}{1 - |\Gamma|^2} \cdot N_0 \cdot G \cdot \left(1 - |\Gamma|^2\right)$$

$$N_2 = N_1 \cdot G_{ech} + \left(F_{ech} - 1\right) \cdot N_0 \cdot G_{ech}$$

$$F_{ech} = 1 + \frac{F - 1}{1 - |\Gamma|^2} \geq F$$

- Obtinerea unui zgomot redus **necesita** o buna adaptare de impedanta

Exemplu

- ATF-34143 **at Vds=3V Id=20mA**.
- @5GHz
  - $S_{11} = 0.64\angle 139°$
  - $S_{12} = 0.119\angle -21°$
  - $S_{21} = 3.165\angle 16°$
  - $S_{22} = 0.22\angle 146°$
  - Fmin = 0.54 (**tipic [dB]**
  - $\Gamma_{opt} = 0.45\angle 174°$
  - $r_n = 0.03$

```
!ATF-34143
!S-PARAMETERS at Vds=3V  Id=20mA.   LAST UPDATED 01-29-99

# ghz s ma r 50

2.0  0.75  -126  6.306  90  0.088  23  0.26  -120
2.5  0.72  -145  5.438  75  0.095  15  0.25  -140
3.0  0.69  -162  4.762  62  0.102  7  0.23  -156
4.0  0.65  166  3.806  38  0.111  -8  0.22  174
5.0  0.64  139  3.165  16  0.119  -21  0.22  146
6.0  0.65  114  2.706  -5  0.125  -35  0.23  118
7.0  0.66  89  2.326  -27  0.129  -49  0.25  91
8.0  0.69  67  2.017  -47  0.133  -62  0.29  67
9.0  0.72  48  1.758  -66  0.135  -75  0.34  46

!FREQ   Fopt    GAMMA OPT      RN/Zo
!GHZ    dB     MAG     ANG     -

2.0  0.19  0.71  66  0.09
2.5  0.23  0.65  83  0.07
3.0  0.29  0.59  102  0.06
4.0  0.42  0.51  138  0.03
5.0  0.54  0.45  174  0.03
6.0  0.67  0.42  -151  0.05
7.0  0.79  0.42  -118  0.10
8.0  0.92  0.45  -88  0.18
9.0  1.04  0.51  -63  0.30
10.0  1.16  0.61  -43  0.46
```

Exemplu

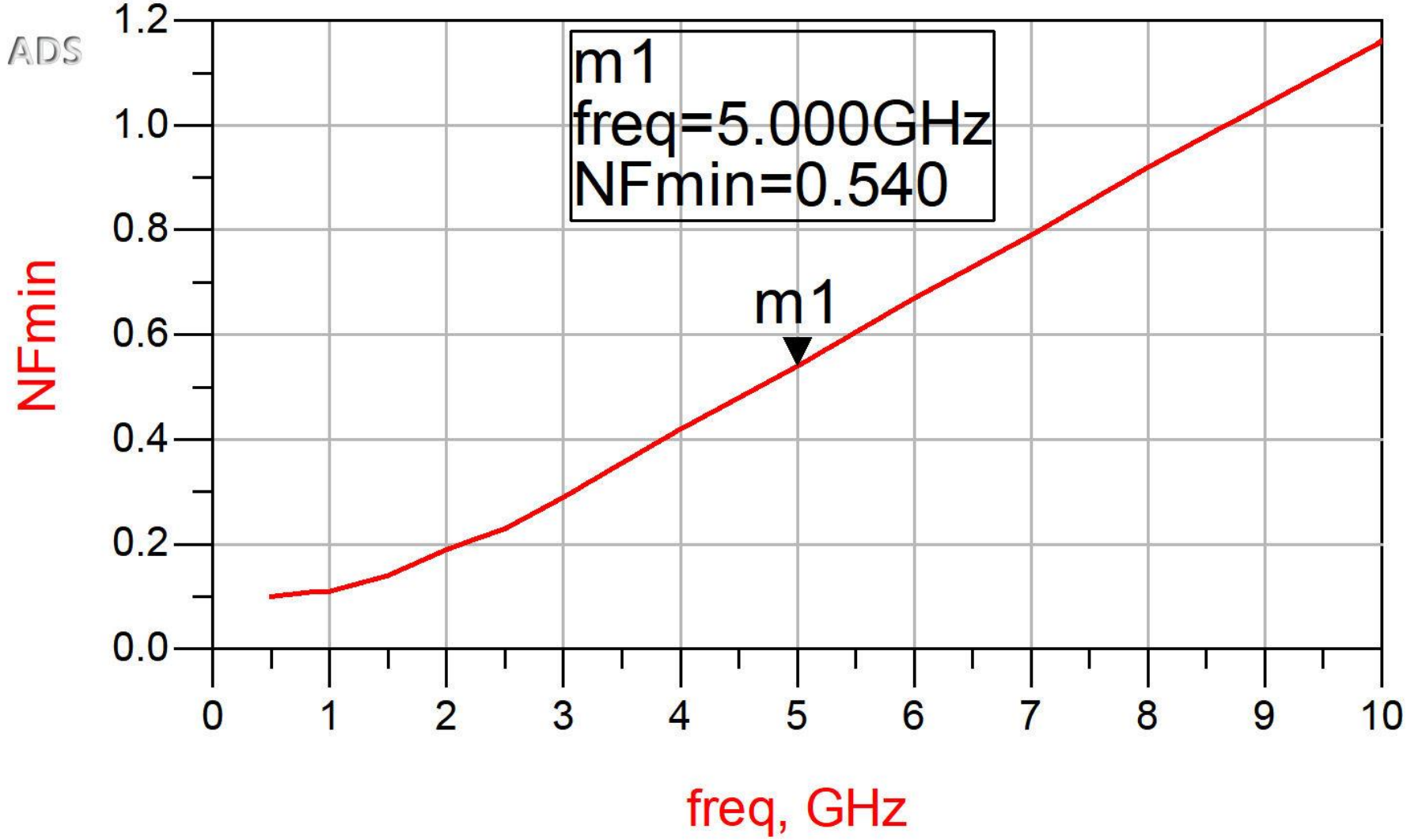
ADS
m1
freq=5.000GHz
NFmin=0.540
m1
NFmin
1.2
1.0
0.8
0.6
0.4
0.2
0.0
0
1
2
3
4
5
6
7
8
9
10
freq, GHz

Stabilizare R serie la intrare

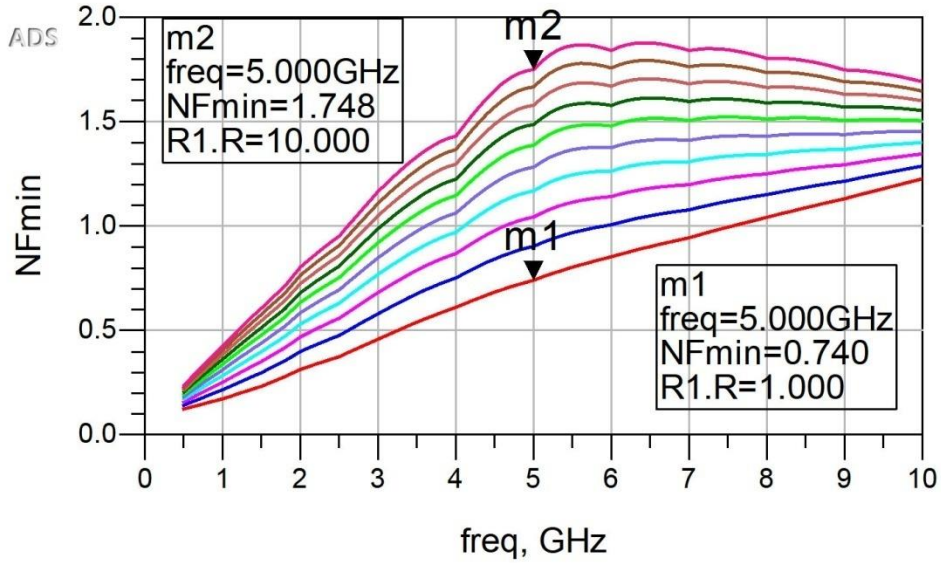

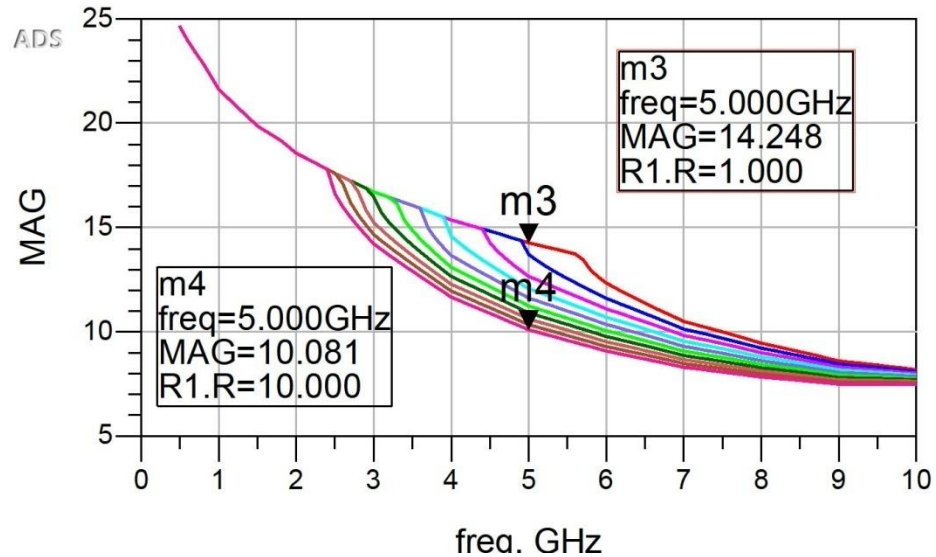

$$R_{SS} = 1 \div 10\ \Omega$$

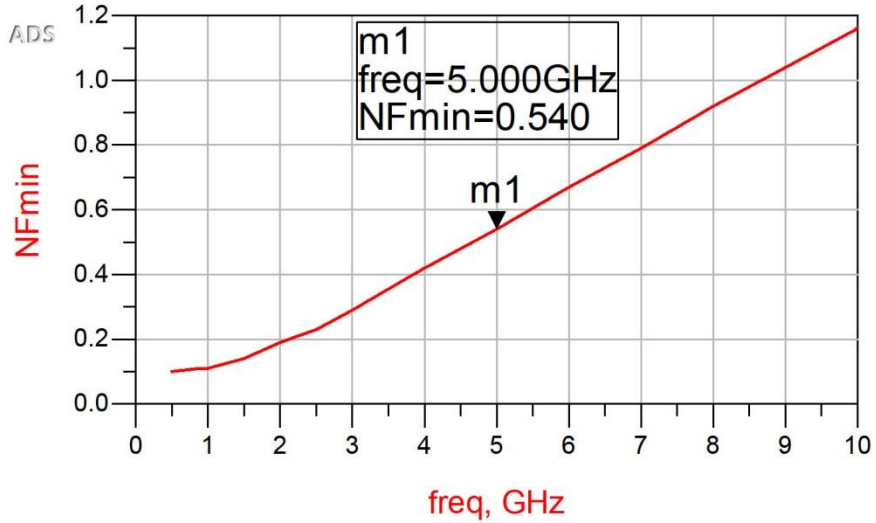

Stabilizare R paralel la intrare

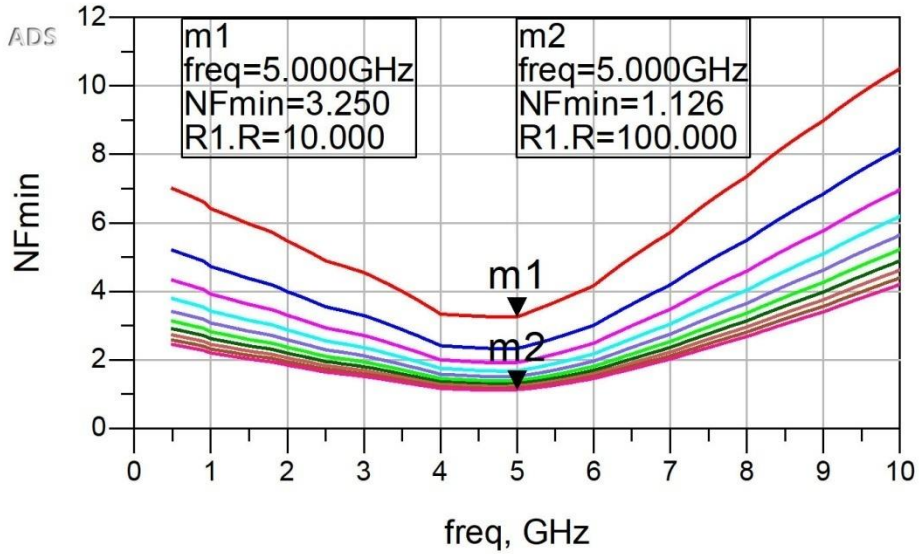

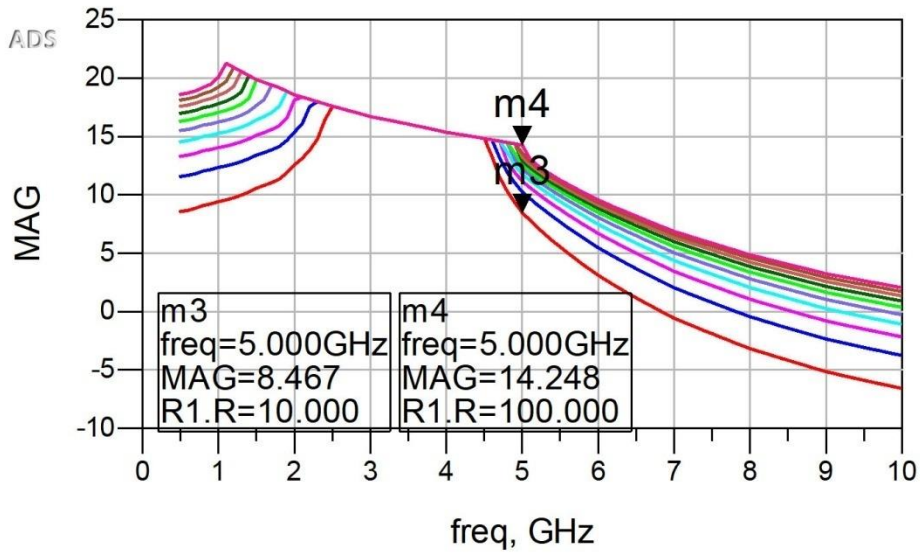

$$R_{PS} = 10 \div 100\ \Omega$$

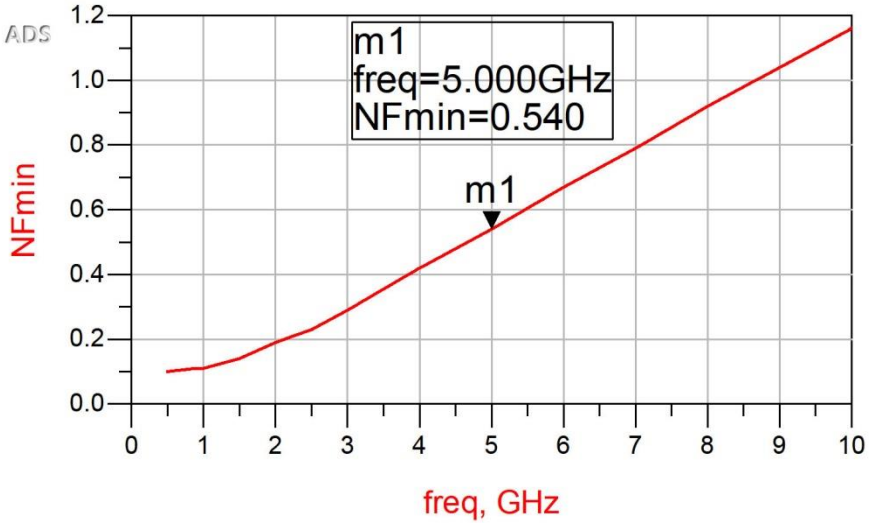

Stabilizare R serie la iesire

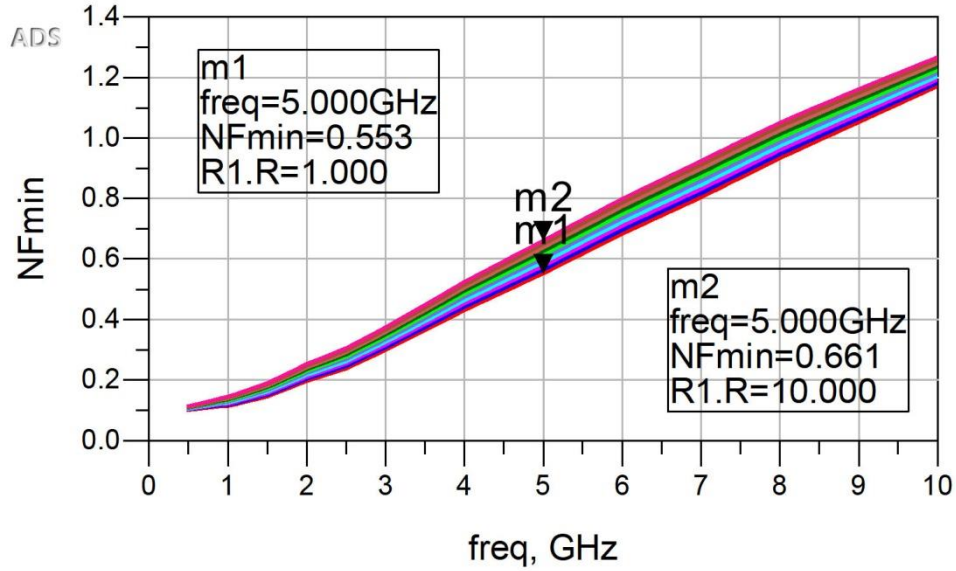

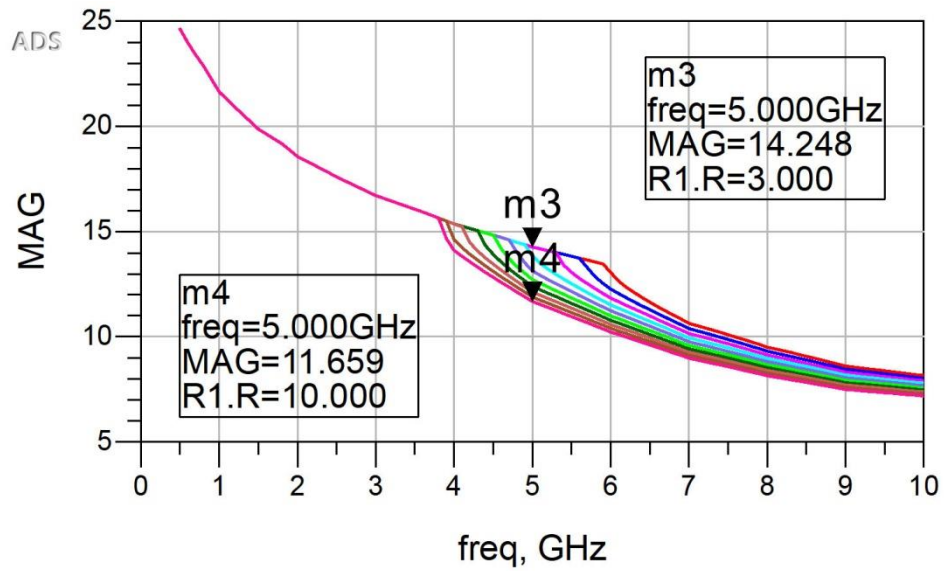

$$R_{SL} = 1 \div 10\ \Omega$$

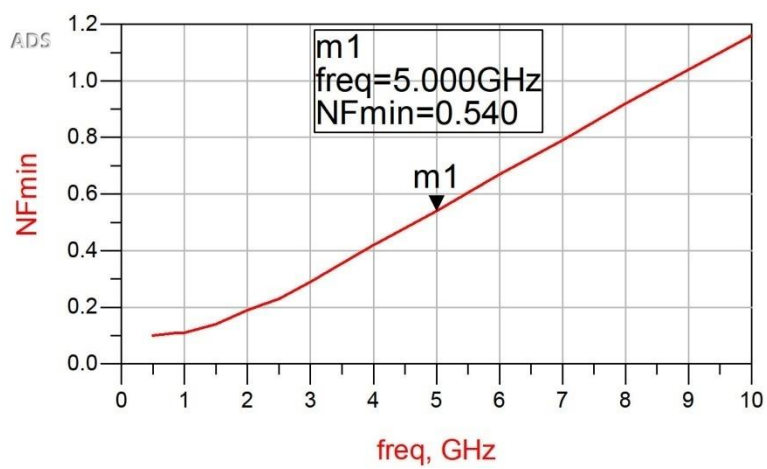

Stabilizare R paralel la iesire

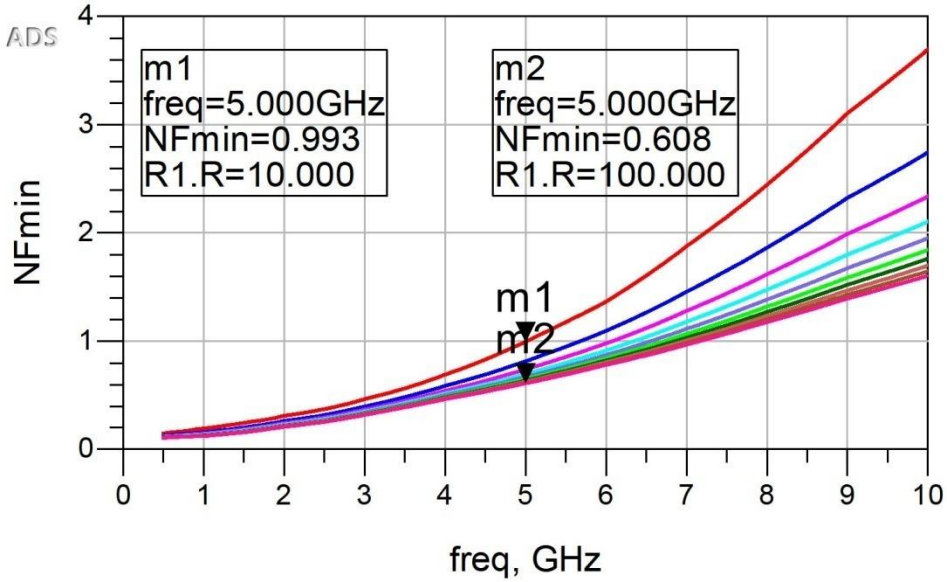

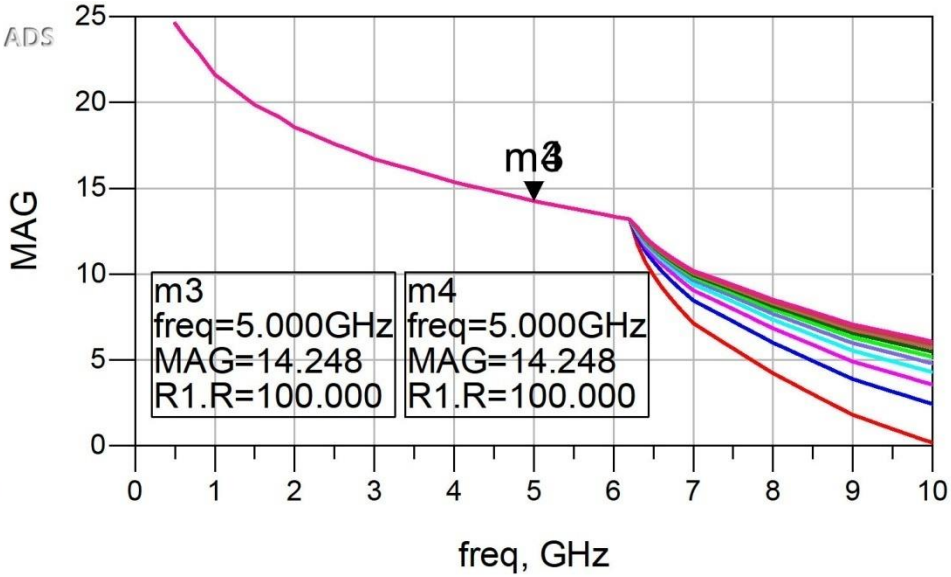

$$R_{PL} = 10 \div 100\ \Omega$$

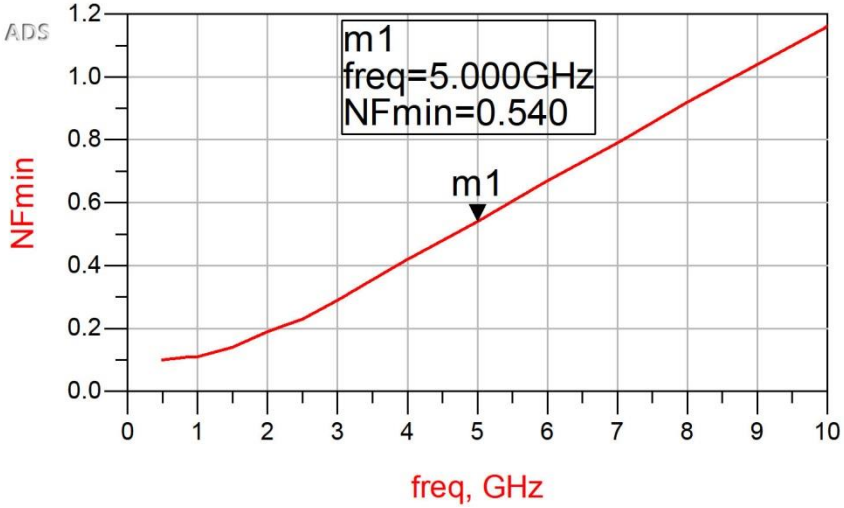

Zgomotul unui amplificator

- Caracterizat de 3 parametri (2reali + 1 complex):

$$F_{\min}, r_n = \frac{R_N}{Z_0}, \Gamma_{opt}$$

$$F = F_{\min} + \frac{R_N}{G_S} \cdot \left| Y_S - Y_{opt} \right|^2 \qquad Y_S = \frac{1}{Z_0} \cdot \frac{1-\Gamma_S}{1+\Gamma_S} \qquad Y_{opt} = \frac{1}{Z_0} \cdot \frac{1-\Gamma_{opt}}{1+\Gamma_{opt}}$$

$$F = F_{\min} + 4 \cdot r_n \cdot \frac{\left| \Gamma_S - \Gamma_{opt} \right|^2}{\left(1 - \left|\Gamma_S\right|^2\right) \cdot \left|1 + \Gamma_{opt}\right|^2}$$

- Γ_{opt} reprezinta coeficientul optim de reflexie la intrare

$$\Gamma_S = \Gamma_{opt} \Rightarrow F = F_{\min}$$

$F(\Gamma_S)$

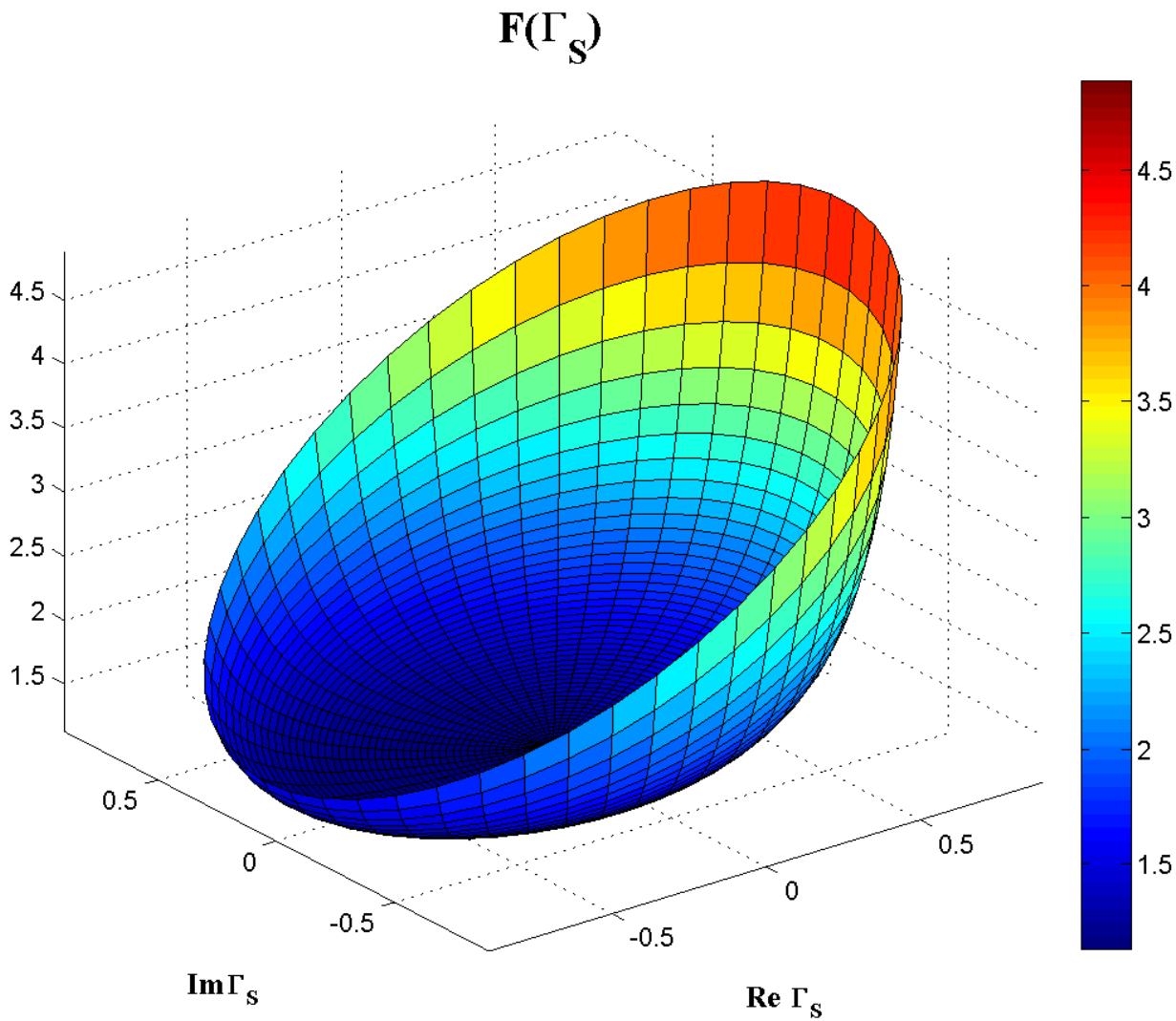

F[dB](Γ_S)

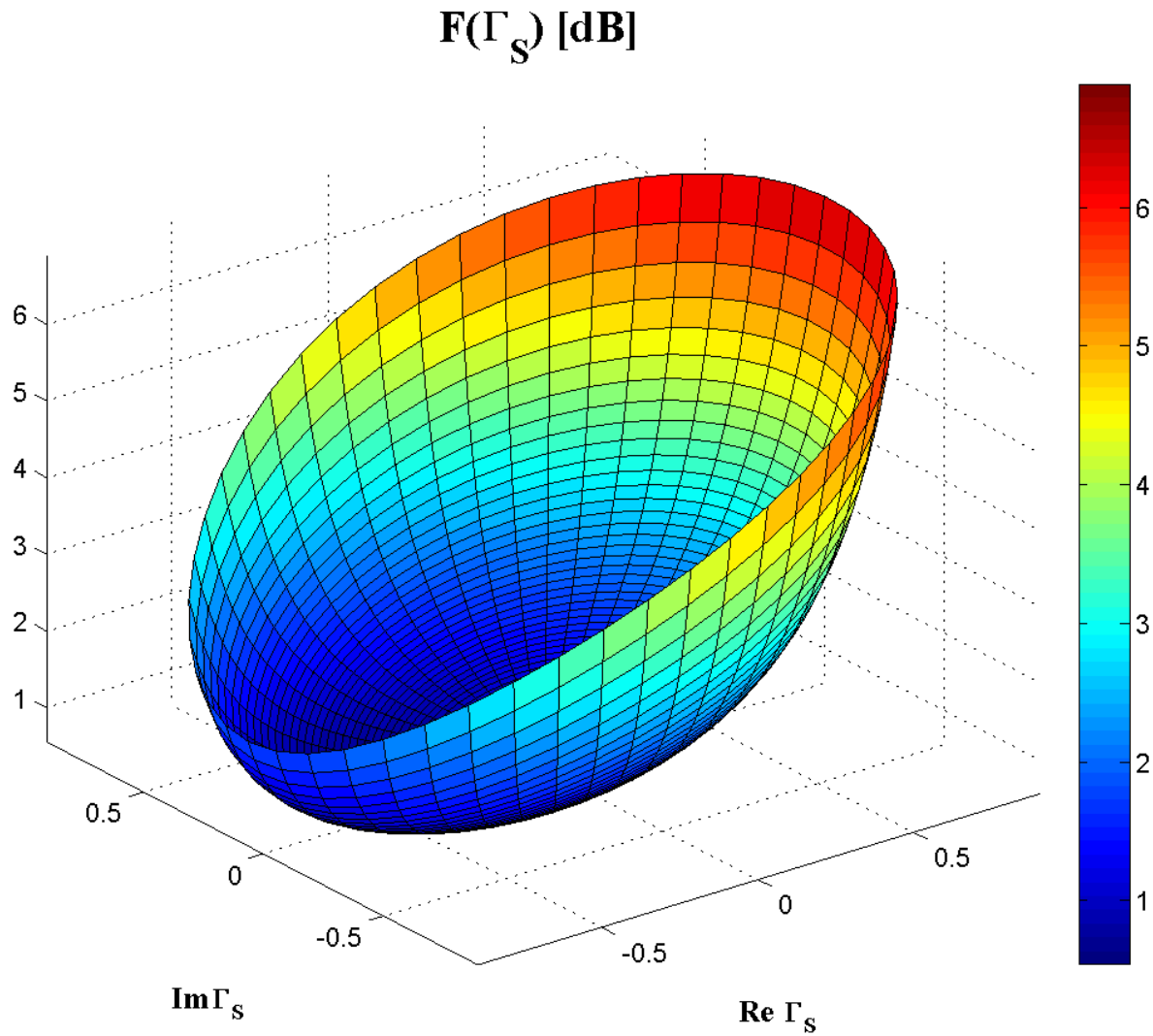

F[dB](Γ_S), diagrama de nivel

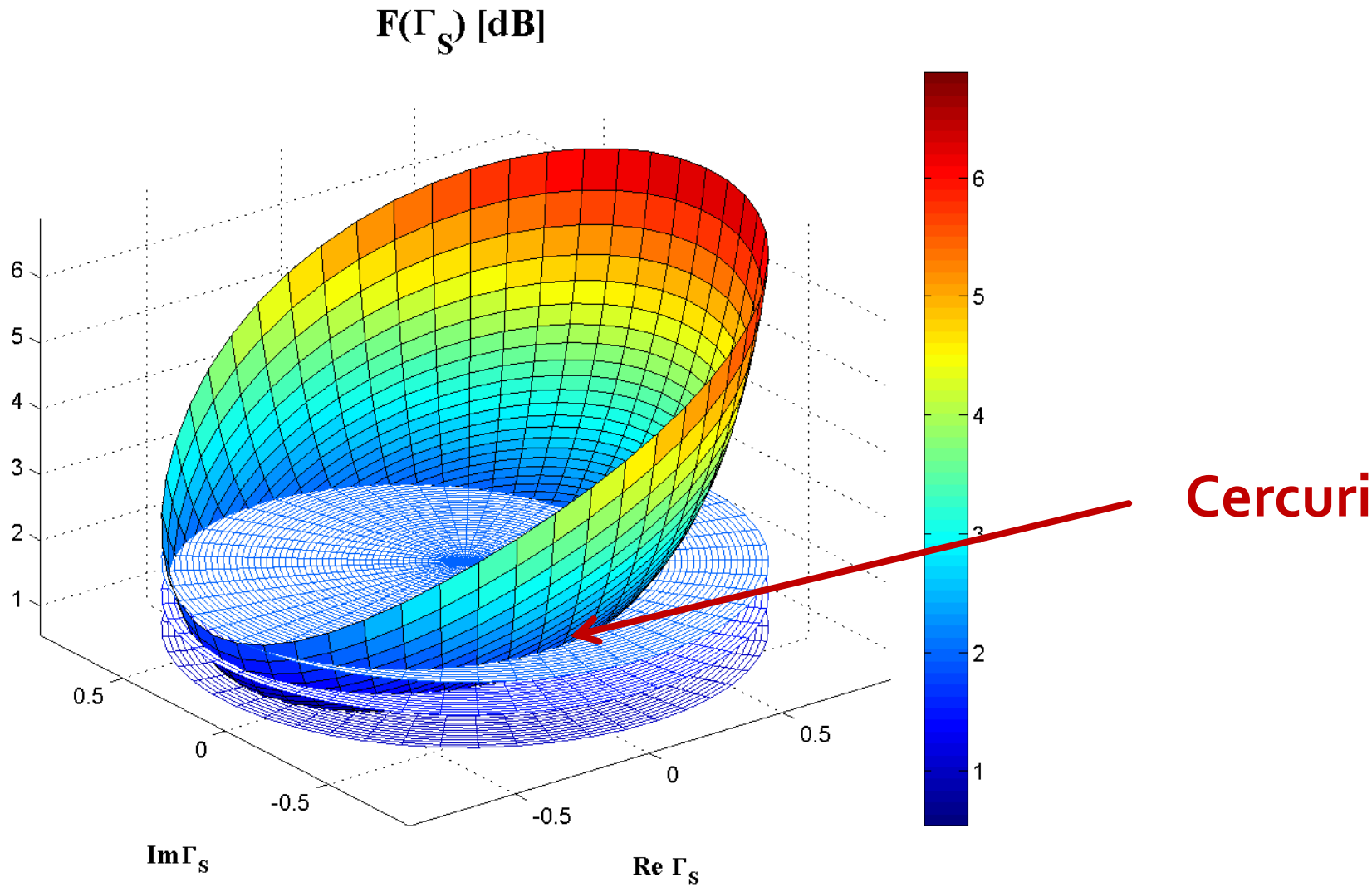

$G_S[dB](\Gamma_S)$, diagrama de nivel

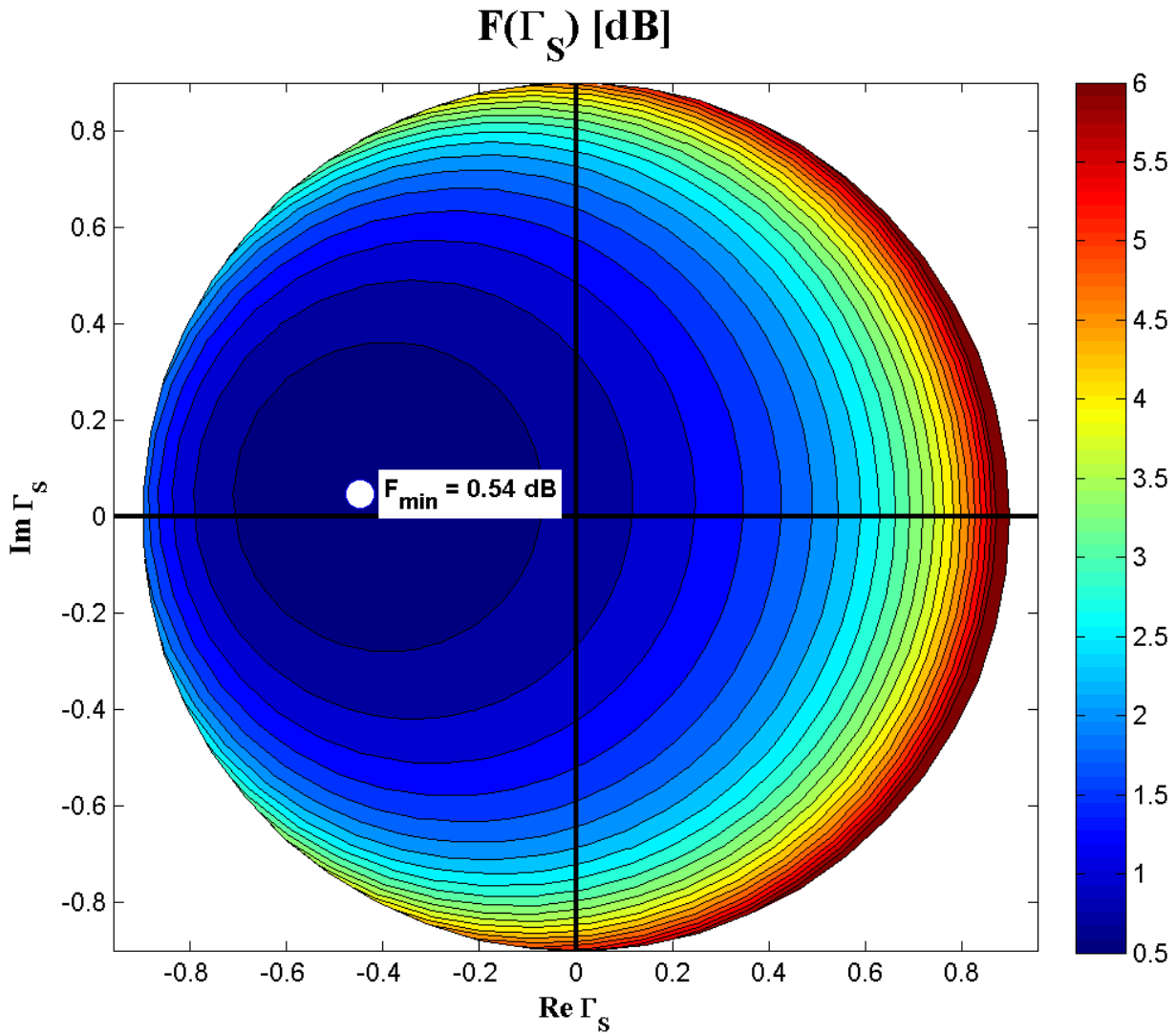

$\Gamma opt = 0.45 \angle 174°$

Cercuri de zgomot constant

- Se noteaza cu N (parametru de zgomot)
  - N constant pentru F constant

$$N = \frac{\left|\Gamma_S - \Gamma_{opt}\right|^2}{1-\left|\Gamma_S\right|^2} = \frac{F - F_{\min}}{4 \cdot r_n} \cdot \left|1 + \Gamma_{opt}\right|^2$$

$$\left(\Gamma_S - \Gamma_{opt}\right) \cdot \left(\Gamma_S^* - \Gamma_{opt}^*\right) = N \cdot \left(1 - \left|\Gamma_S\right|^2\right)$$

$$\Gamma_S \cdot \Gamma_S^* + N \cdot \left|\Gamma_S\right|^2 - \left(\Gamma_S \cdot \Gamma_{opt}^* - \Gamma_S^* \cdot \Gamma_{opt}\right) + \Gamma_{opt} \cdot \Gamma_{opt}^* = N$$

$$\Gamma_S \cdot \Gamma_S^* - \frac{\Gamma_S \cdot \Gamma_{opt}^* - \Gamma_S^* \cdot \Gamma_{opt}}{N+1} = \frac{N - \left|\Gamma_{opt}\right|^2}{N+1} + \frac{\left|\Gamma_{opt}\right|^2}{(N+1)^2}$$

Zgomot

$$\left|\Gamma_S - \frac{\Gamma_{opt}}{N+1}\right| = \frac{\sqrt{N \cdot \left(N+1-\left|\Gamma_{opt}\right|^2\right)}}{N+1}$$

$$\left|\Gamma_S - C_F\right| = R_F$$

$$(x-x_0)^2 + (y-y_0)^2 = R^2$$

$$\left|\Gamma - \Gamma_0\right| = R$$

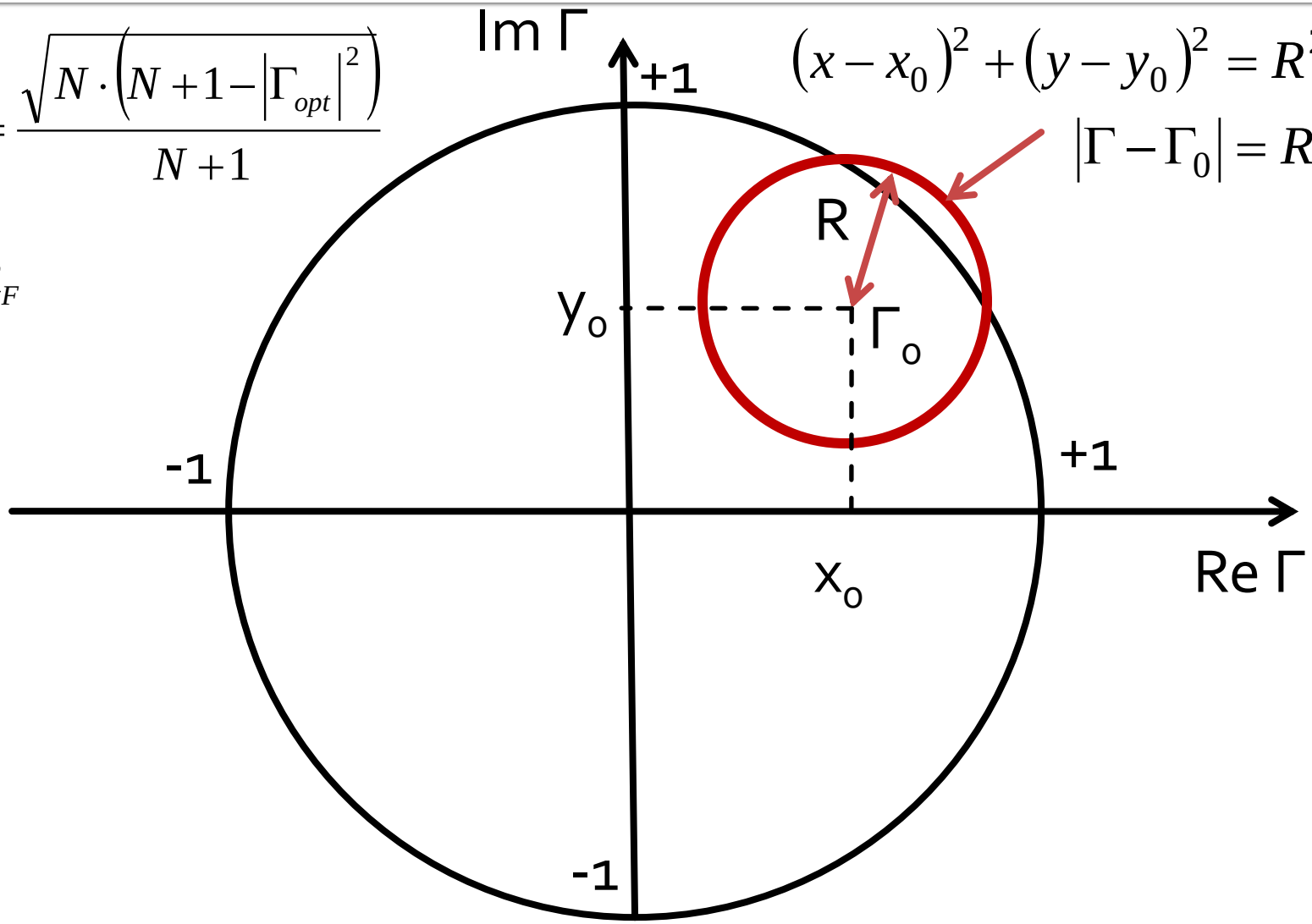

Cercuri de zgomot constant

$$\left|\Gamma_S - \frac{\Gamma_{opt}}{N+1}\right| = \frac{\sqrt{N \cdot \left(N+1-\left|\Gamma_{opt}\right|^2\right)}}{N+1}$$

$$\left|\Gamma_S - C_F\right| = R_F$$

$$C_F = \frac{\Gamma_{opt}}{N+1} \qquad R_F = \frac{\sqrt{N \cdot \left(N+1-\left|\Gamma_{opt}\right|^2\right)}}{N+1}$$

- Locul geometric al punctelor caracterizate de factor de zgomot constant este un cerc
- **Interpretare**: Orice punct Γ_S care reprezentat in planul complex se gaseste **pe** cercul desenat pentru F_{cerc} va conduce la obtinerea factorului de zgomot $F = F_{cerc}$
  - Orice punct **in exteriorul** acestui cerc va genera un factor de zgomot $F > F_{cerc}$
  - Orice punct **in interiorul** acestui cerc va genera un factor de zgomot $F < F_{cerc}$

ADS

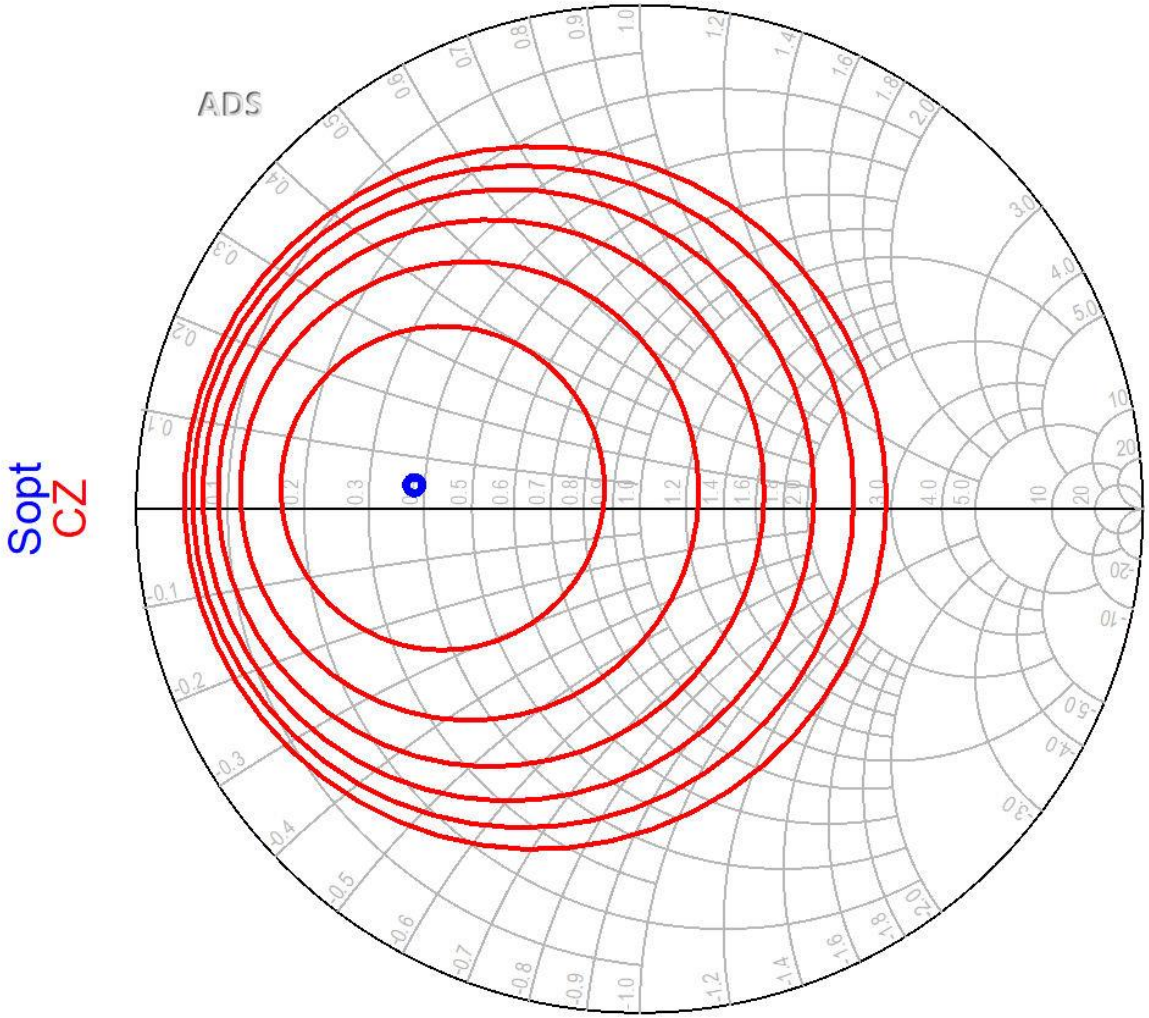

Cercuri de zgomot constant

- Se observa ca zgomotul generat de tranzistor depinde numai de modul in care se realizeaza adaptarea la intrare
- Se poate obtine un minim (F_{min} care este parametru de catalog pentru tranzistor)
- Daca se urmareste realizarea unui amplificator de zgomot redus (**LNA**) o metoda uzuala este:
  - adaptarea la intrare a tranzistorului din considerente de zgomot
  - adaptarea la iesire utilizata pentru compensarea castigului (daca sunt elemente cu pierderi adaptarea la iesire poate adauga zgomot propriu, dar nu se influenteaza in nici un fel zgomotul generat de tranzistor)

LNA – Low Noise Amplifier

- De obicei un tranzistor potrivit pentru implementarea unui LNA la o anumita frecventa va avea cercurile de castig la intrare si cercurile de zgomot in aceeasi zona pentru Γ_S

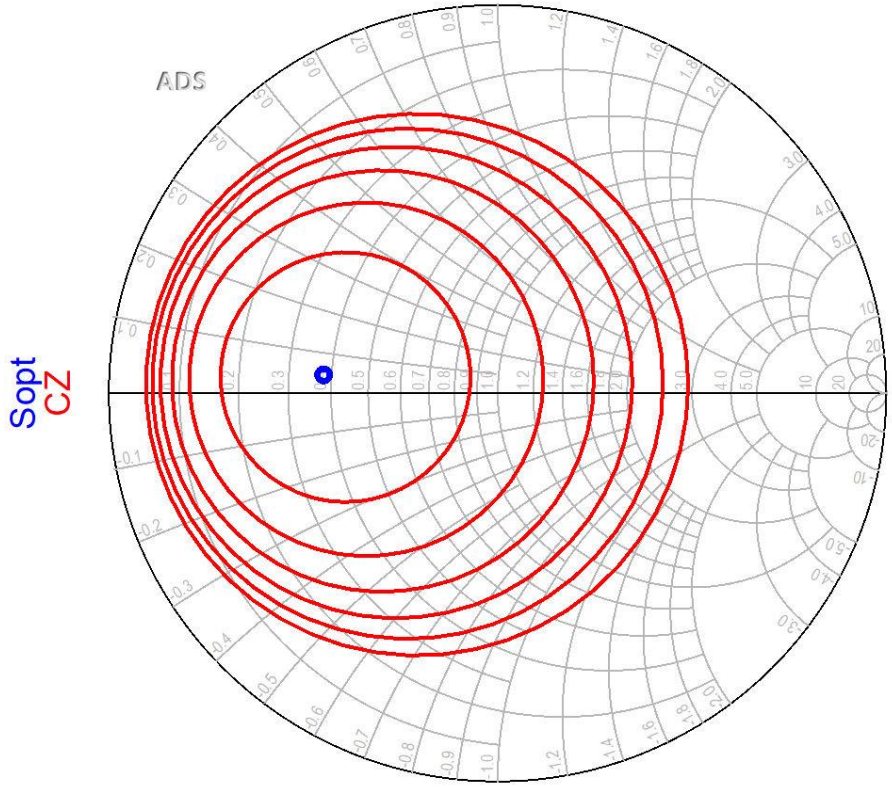

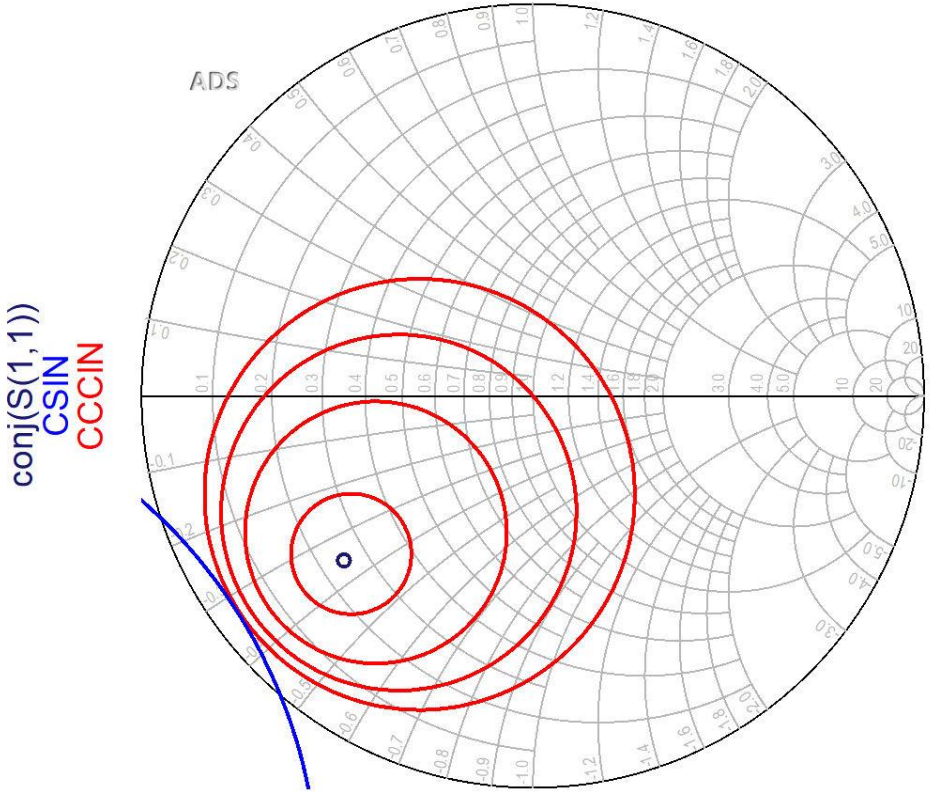

Adaptare – 1

- Conectarea amplificatorului (tranzistorului) direct la sursa de semnal oferă un coeficient de reflexie la intrarea tranzistorului egal cu **0** (complex, $\Gamma_0 = 0 + 0 \cdot j$)
  - de cele mai multe ori acest coeficient de reflexie nu oferă conditii optime de castig si/sau zgomot

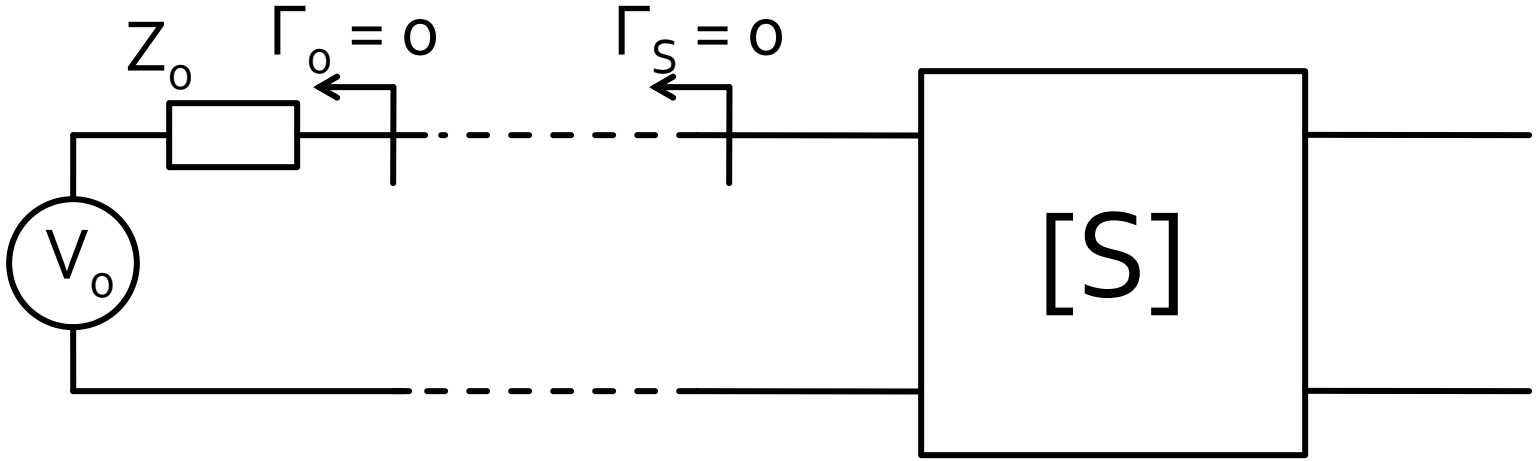

Adaptare – 2

- Se deseneaza pe diagrama Smith cercurile de stabilitate/castig/zgomot, in functie de aplicatia
- Se alege punctul cu o pozitionare dorita relativ la aceste cercuri (de asemenea dependent de aplicatie)
- Se determina valoarea coeficientului de reflexie dorit la intrare Γ_S

$$\Gamma_S = 0.412\angle -177.966°$$

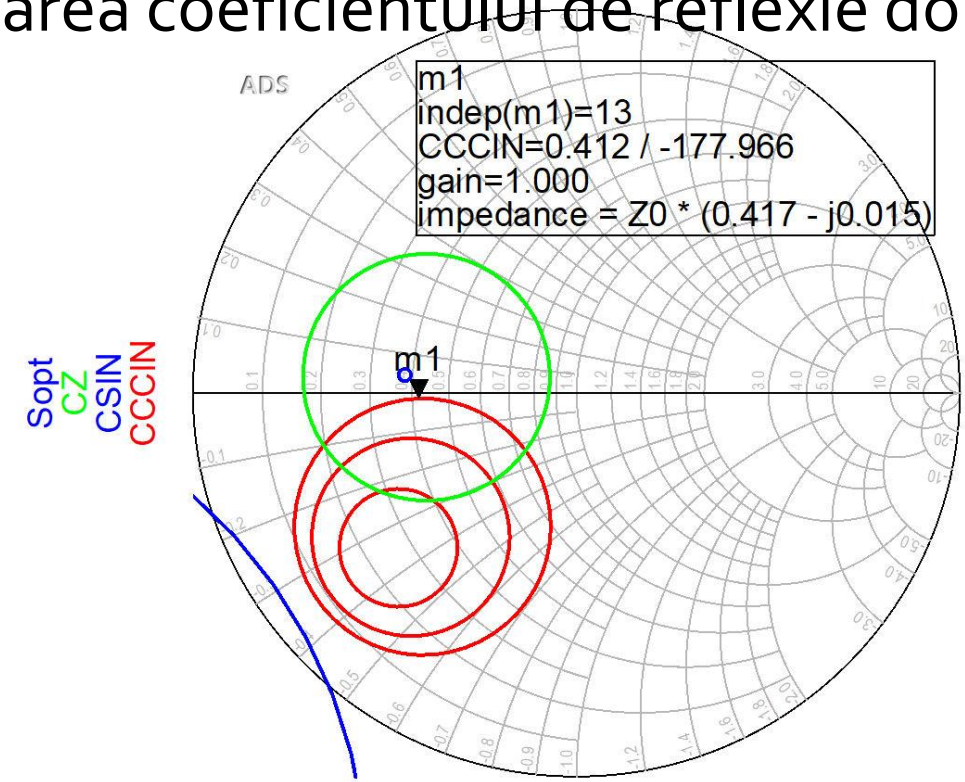

Adaptare – 3

- Se interpune reteaua de adaptare la intrare care permite obtinerea lui Γ_S determinat anterior

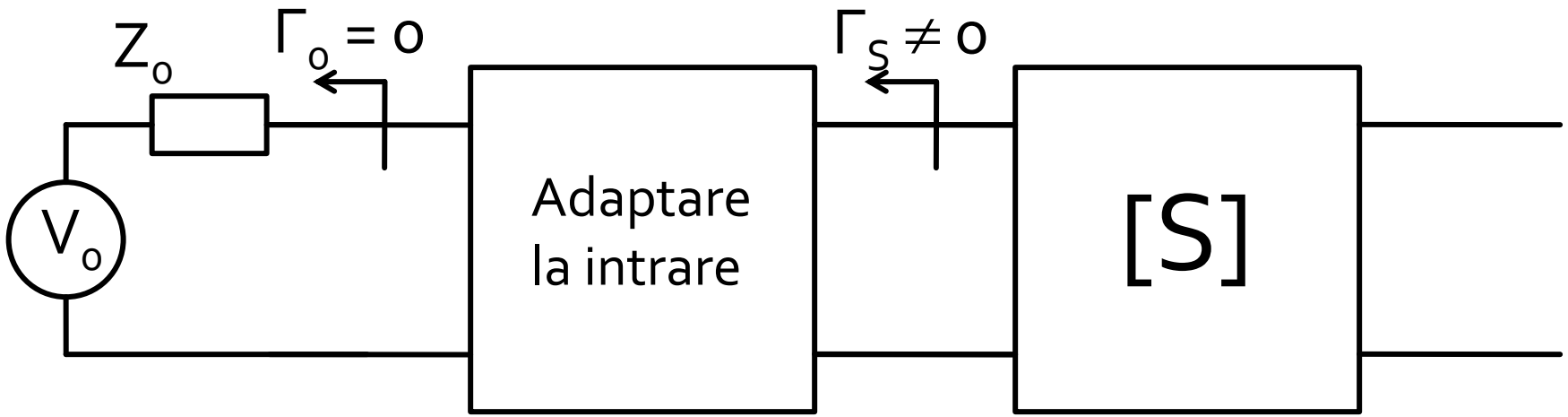

Adaptare – 4

- Varianta cea mai simpla de implementare, si pentru care exista relatii analitice de calcul consta in introducerea (in ordine, de la tranzistor spre sursa Z_o):
  - o sectiune de linie serie, cu impedanta caracteristica Z_o si lungime electrica θ
  - un **s**tub **p**aralel, lasat in gol la capat, realizat dintr-o linie cu impedanta caracteristica Z_o si lungime electrica θ_{sp}

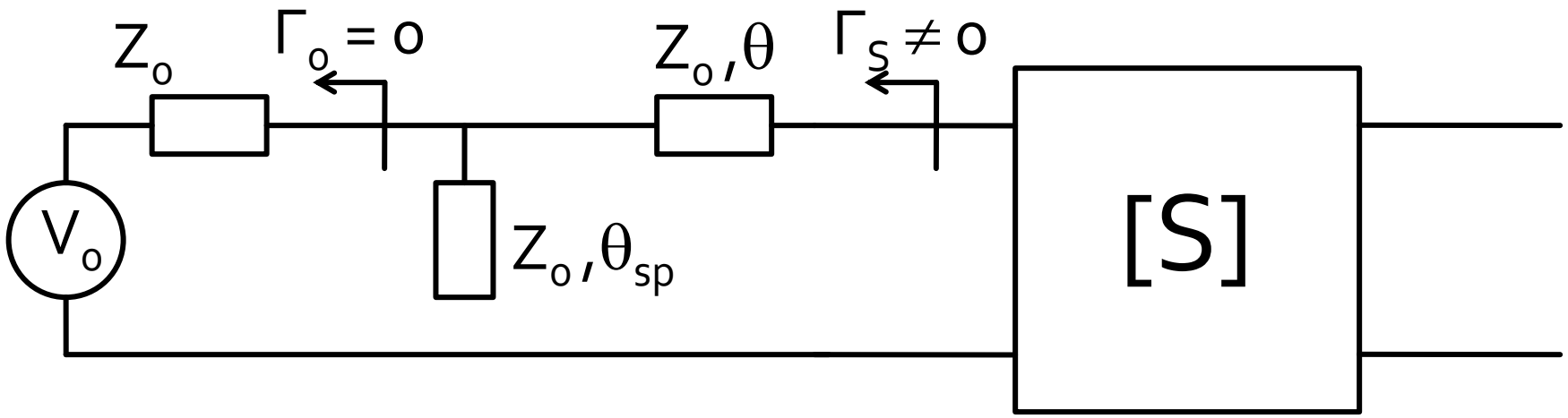

Adaptare – 5

- Relatiile de calcul depind numai de Γ_S (modul si faza)

$$\cos(\varphi_S + 2\theta) = -|\Gamma_S| \qquad \tan\theta_{sp} = \frac{\mp 2\cdot|\Gamma_S|}{\sqrt{1-|\Gamma_S|^2}}$$

- Prima ecuatie are doua solutii, semnul solutiei alese impune semnul utilizat in a doua ecuatie

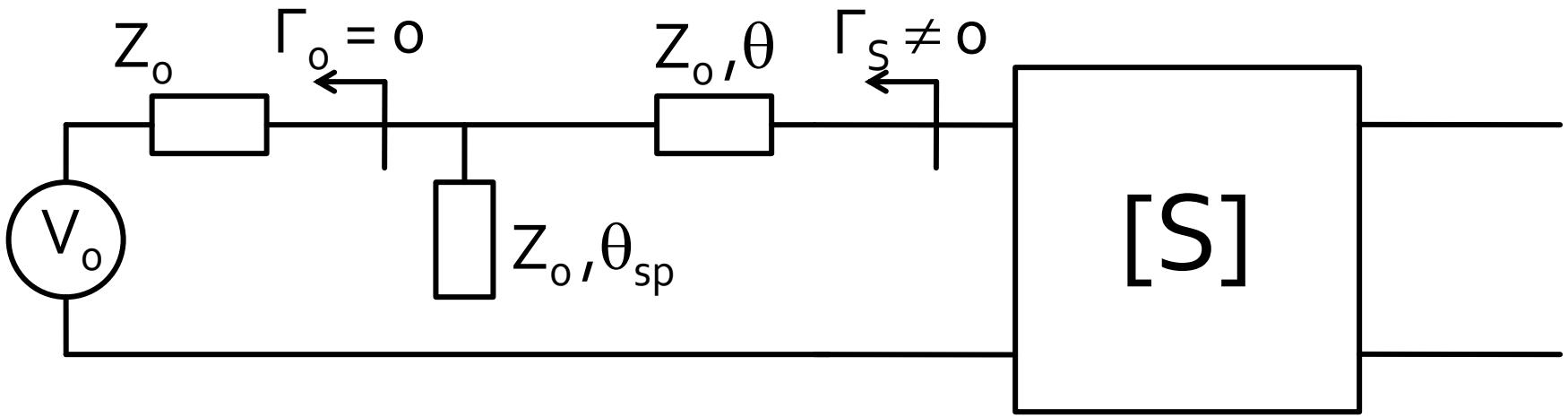

Adaptare cu stub-uri, C8

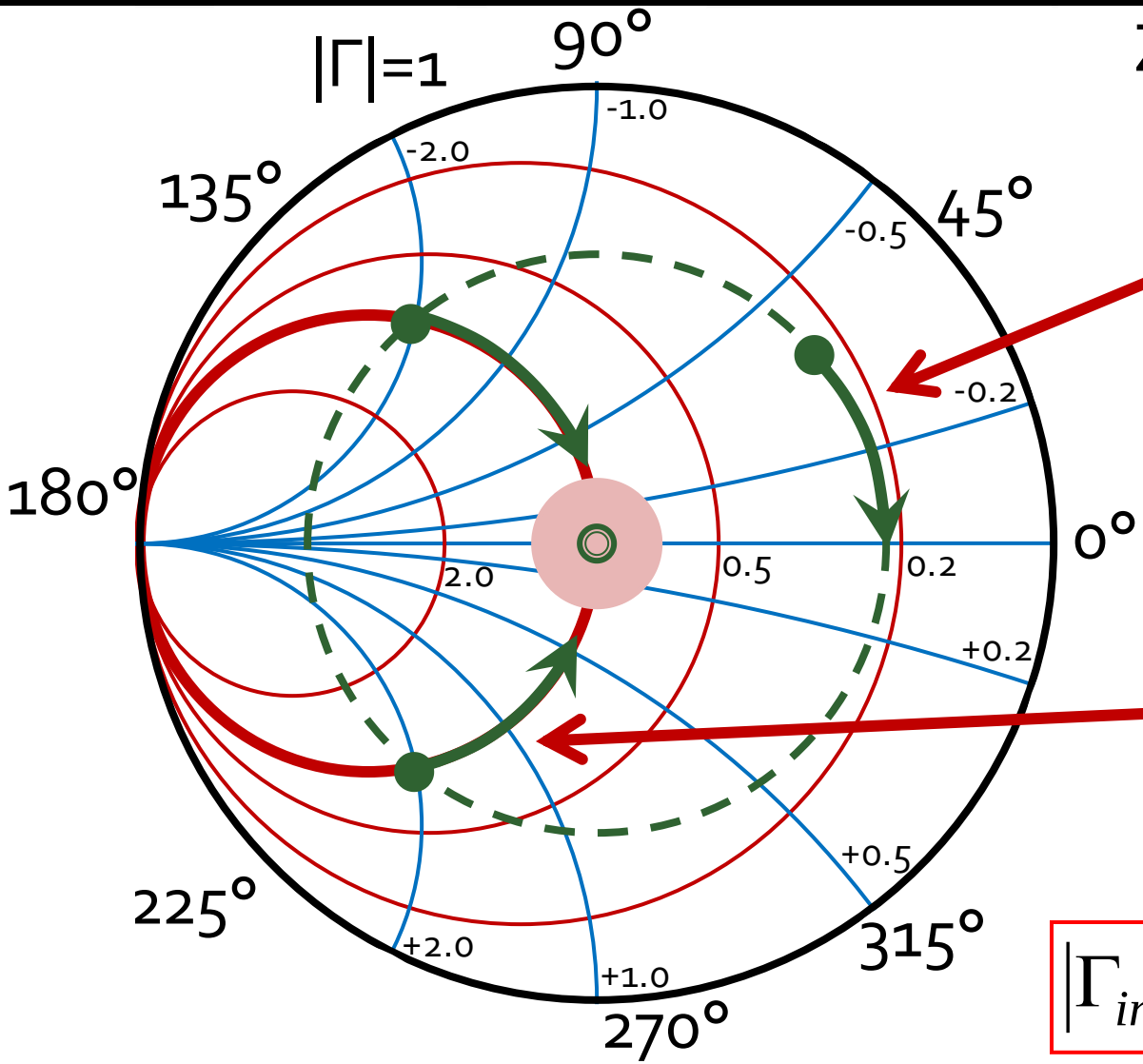

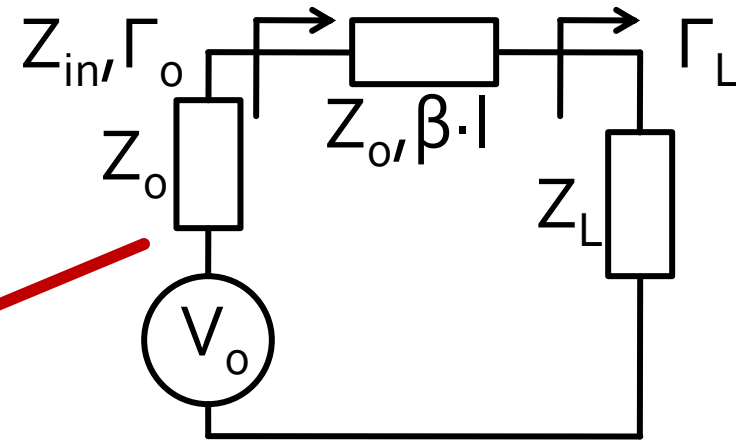

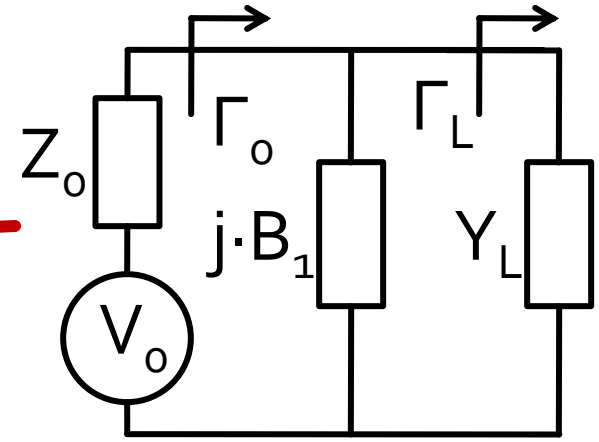

$$\boxed{|\Gamma_{in}| = |\Gamma_L|}$$

$$\boxed{g_{in} = 1}$$

Exemplu, LNA @ 5 GHz

- ATF-34143 **at Vds=3V Id=20mA**.
- @5GHz
  - $S_{11} = 0.64\angle 139°$
  - $S_{12} = 0.119\angle -21°$
  - $S_{21} = 3.165\angle 16°$
  - $S_{22} = 0.22\angle 146°$
  - Fmin = 0.54 (**tipic [dB]**
  - $\Gamma_{opt} = 0.45\angle 174°$
  - $r_n = 0.03$

```
!ATF-34143
!S-PARAMETERS at Vds=3V  Id=20mA.   LAST UPDATED 01-29-99

# ghz s ma r 50

2.0  0.75  -126  6.306  90  0.088  23  0.26  -120
2.5  0.72  -145  5.438  75  0.095  15  0.25  -140
3.0  0.69  -162  4.762  62  0.102  7  0.23  -156
4.0  0.65  166  3.806  38  0.111  -8  0.22  174
5.0  0.64  139  3.165  16  0.119  -21  0.22  146
6.0  0.65  114  2.706  -5  0.125  -35  0.23  118
7.0  0.66  89  2.326  -27  0.129  -49  0.25  91
8.0  0.69  67  2.017  -47  0.133  -62  0.29  67
9.0  0.72  48  1.758  -66  0.135  -75  0.34  46

!FREQ   Fopt    GAMMA OPT      RN/Zo
!GHZ    dB     MAG     ANG     -

2.0  0.19  0.71  66  0.09
2.5  0.23  0.65  83  0.07
3.0  0.29  0.59  102  0.06
4.0  0.42  0.51  138  0.03
5.0  0.54  0.45  174  0.03
6.0  0.67  0.42  -151  0.05
7.0  0.79  0.42  -118  0.10
8.0  0.92  0.45  -88  0.18
9.0  1.04  0.51  -63  0.30
10.0  1.16  0.61  -43  0.46
```

Exemplu, LNA @ 5 GHz

- Amplificator de zgomot redus
- La intrare e necesar un compromis intre
  - zgomot (cerc de zgomot constant ~~la intrare~~)
  - castig (cerc de castig constant la intrare)
  - stabilitate (cerc de stabilitate la intrare)
- La iesire zgomotul **nu intervine** (nu exista influenta). Compromis intre:
  - castig (cerc de castig constant la iesire)
  - stabilitate (cerc de stabilitate la iesire)

Exemplu, LNA @ 5 GHz

$$U = \frac{|S_{12}|\cdot|S_{21}|\cdot|S_{11}|\cdot|S_{22}|}{\left(1-|S_{11}|^2\right)\cdot\left(1-|S_{22}|^2\right)} = 0.094$$

$$-0.783\,dB < G_T[dB] - G_{TU}[dB] < 0.861\,dB$$

$$G_{TU\max} = \frac{1}{1-|S_{11}|^2}\cdot|S_{21}|^2\cdot\frac{1}{1-|S_{22}|^2} = 17.83$$

$$G_{TU\max}[dB] = 12.511\,dB$$

$$G_0 = |S_{21}|^2 = 10.017 = 10.007\,dB$$

$$G_{S\max} = \frac{1}{1-|S_{11}|^2} = 1.694 = 2.289\,dB$$

$$G_{L\max} = \frac{1}{1-|S_{22}|^2} = 1.051 = 0.215\,dB$$

- In cazul particular prezent G_{Lmax} = 0.21 dB, amplificatorul ar putea functiona cu iesirea conectata direct la o sarcina de 50Ω
- Absenta retelei de adaptare la iesire nu conduce la o pierdere importanta de castig, dar elimina posibilitatea ca prin reglaj sa se compenseze compromisul castig/zgomot introdus la intrare

Adaptare la intrare

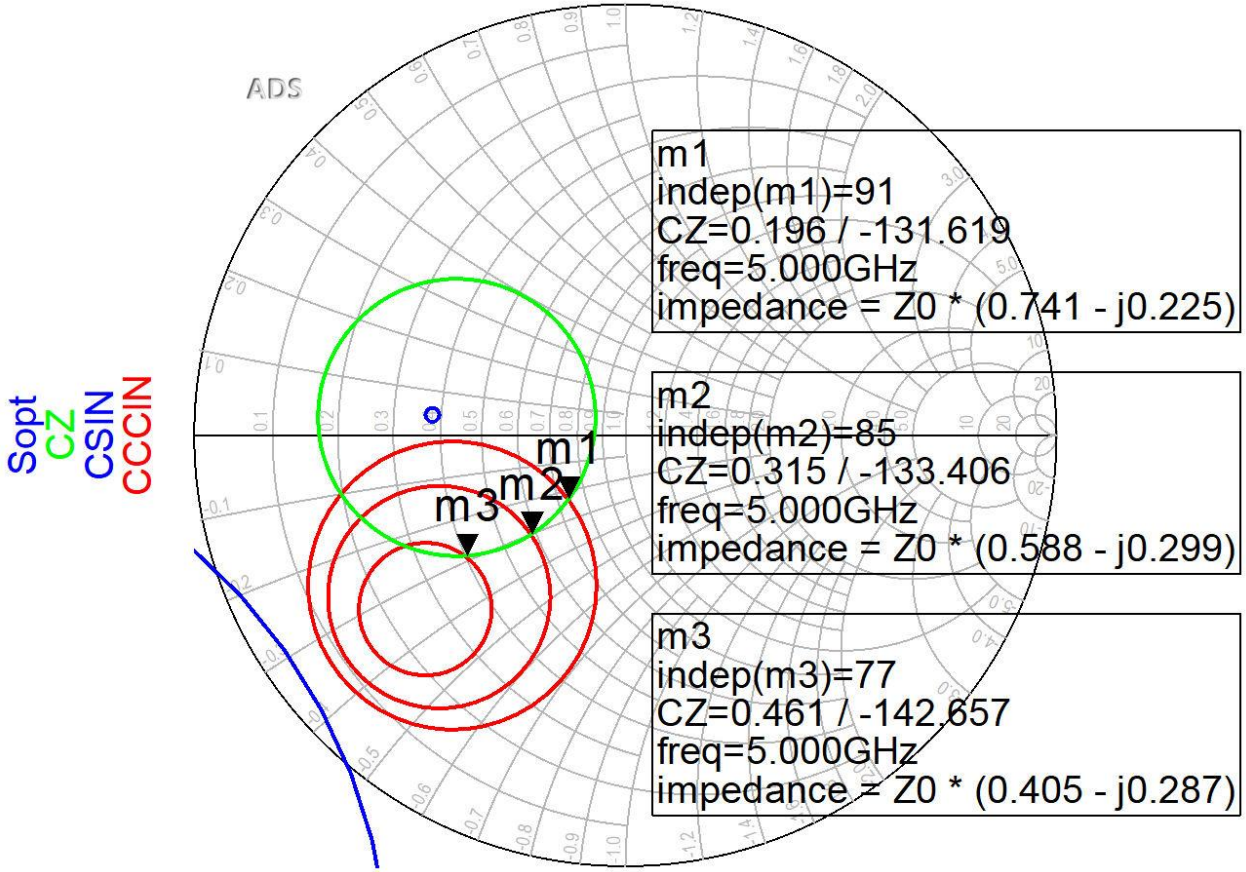

- Pentru reteaua de adaptare la intrare
  - CZ: 0.75dB
  - CCCIN: 1dB, 1.5dB, 2 dB
- Aleg (Q mic → banda larga) pozitia m1

Adaptare la intrare

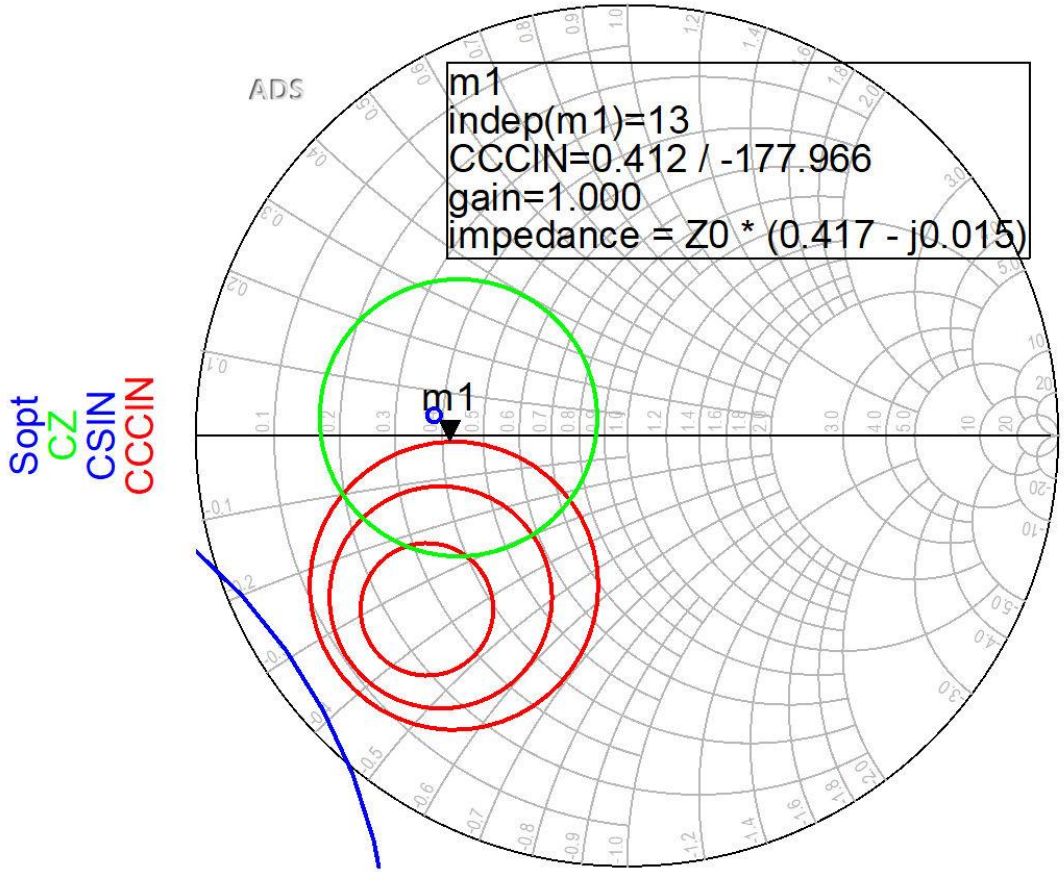

- Daca se sacrifica 1.2dB castig la intrare pentru conditii convenabile F,Q (Gs = 1 dB)
- Se prefera obtinerea unui zgomot mai mic

Adaptare la intrare

- Pozitia m1 de pe grafic

$$\Gamma_S = 0.412\angle -178^\circ \qquad |\Gamma_S| = 0.412; \quad \varphi = -178^\circ$$

$$\cos(\varphi + 2\theta) = -|\Gamma_S| \qquad \mathrm{Im}[y_S(\theta)] = \frac{\mp 2 \cdot |\Gamma_S|}{\sqrt{1 - |\Gamma_S|^2}}$$

$$\cos(\varphi + 2\theta) = -0.412 \Rightarrow \qquad (\varphi + 2\theta) = \pm 114.33^\circ$$

$$(\varphi + 2\theta) = \begin{cases} +114.33^\circ \\ -114.33^\circ \end{cases} \quad \theta = \begin{cases} 146.2^\circ \\ 31.8^\circ \end{cases} \quad \mathrm{Im}[y_S(\theta)] = \begin{cases} -0.904 \\ +0.904 \end{cases} \quad \theta_{sp} = \begin{cases} 137.9^\circ \\ 42.1^\circ \end{cases}$$

Adaptare la iesire

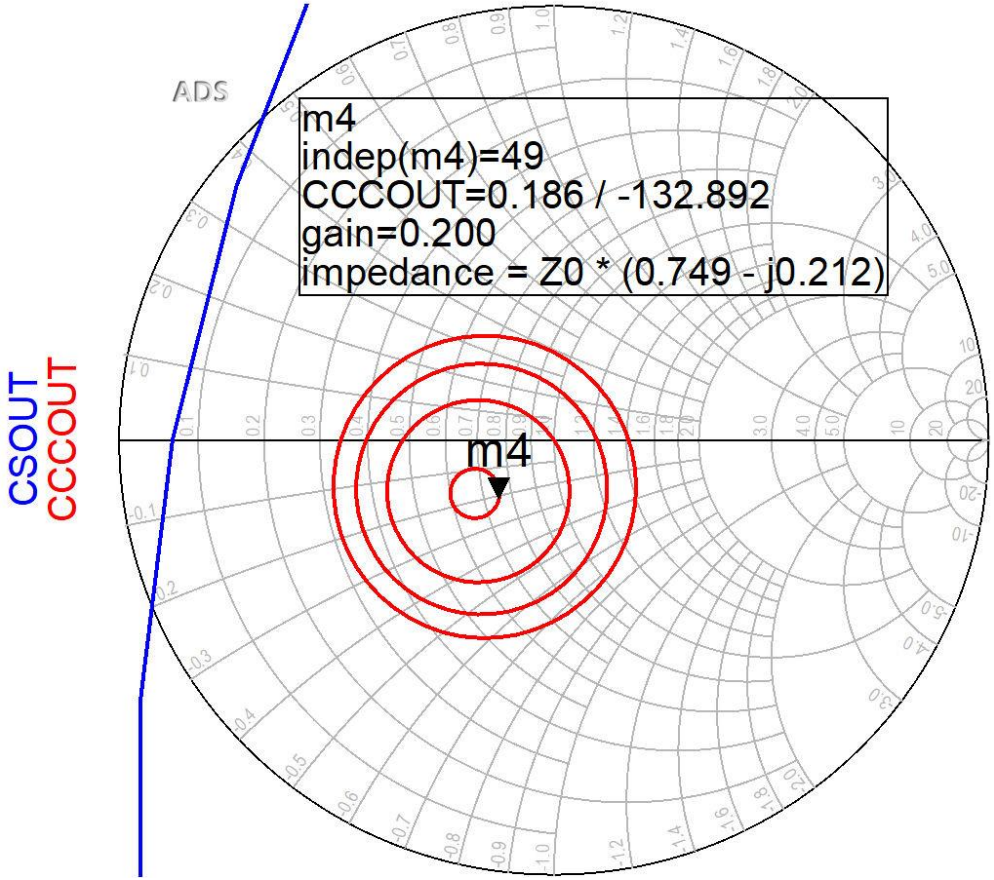

- CCCOUT: -0.4dB, -0.2dB, 0dB, +0.2dB
- Lipsa conditiilor privitoare la zgomot ofera posibilitatea obtinerii unui castig mai mare (spre maxim)

Adaptare la iesire

- Pozitia m4 de pe grafic

$$\Gamma_L = 0.186\angle -132.9^\circ \qquad |\Gamma_L| = 0.186; \quad \varphi = -132.9^\circ$$

$$\cos(\varphi + 2\theta) = -|\Gamma_L| \qquad \mathrm{Im}[y_L(\theta)] = \frac{-2\cdot|\Gamma_L|}{\sqrt{1-|\Gamma_L|^2}} = -0.379$$

$$\cos(\varphi + 2\theta) = -0.186 \Rightarrow \quad (\varphi + 2\theta) = \pm 100.72^\circ$$

$$(\varphi + 2\theta) = \begin{cases} +100.72^\circ \\ -100.72^\circ \end{cases} \quad \theta = \begin{cases} 116.8^\circ \\ 16.1^\circ \end{cases} \quad \mathrm{Im}[y_L(\theta)] = \begin{cases} -0.379 \\ +0.379 \end{cases} \quad \theta_{sp} = \begin{cases} 159.3^\circ \\ 20.7^\circ \end{cases}$$

LNA

- Se estimeaza obtinerea unui castig (in ipoteza unilaterala, ±0.9 dB)

$$G_T[dB] = G_S[dB] + G_0[dB] + G_L[dB]$$

$$G_T[dB] = 1\,dB + 10\,dB + 0.2\,dB = 11.2\,dB$$

- Se estimeaza obtinerea unui factor de zgomot sub 0.75 dB (destul de apropiat de minim ~0.6 dB)

ADS

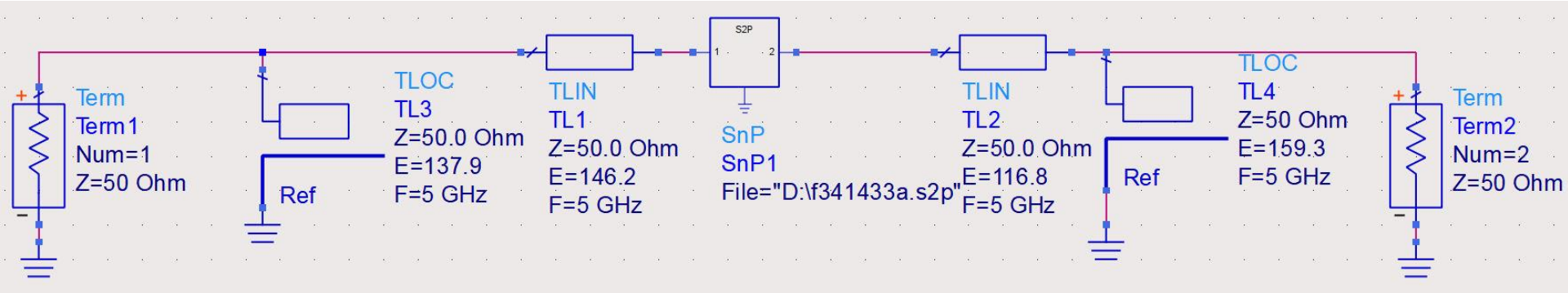
Term
Term1
Num=1
Z=50 Ohm
Ref
TLOC
TL3
Z=50.0 Ohm
E=137.9
F=5 GHz
TLIN
TL1
Z=50.0 Ohm
E=146.2
F=5 GHz
S2P
1
2
SnP
SnP1
File="D:\f341433a.s2p"
TLIN
TL2
Z=50.0 Ohm
E=116.8
F=5 GHz
Ref
TLOC
TL4
Z=50 Ohm
E=159.3
F=5 GHz
Term
Term2
Num=2
Z=50 Ohm

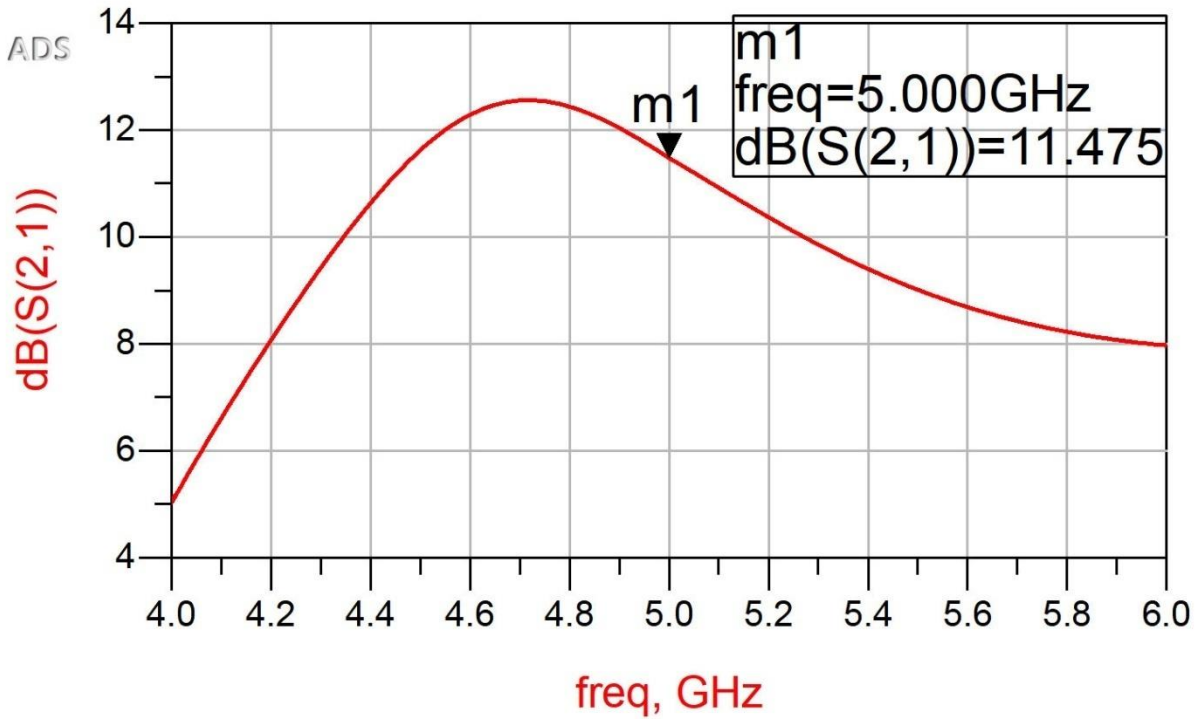
ADS
m1
freq=5.000GHz
dB(S(2,1))=11.475
m1
dB(S(2,1))
14
12
10
8
6
4
4.0
4.2
4.4
4.6
4.8
5.0
5.2
5.4
5.6
5.8
6.0
freq, GHz

ADS

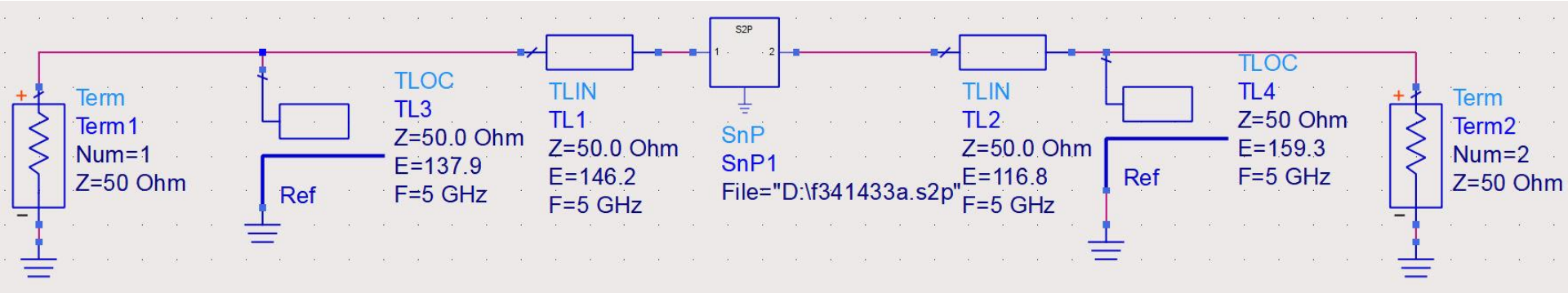
Term
Term1
Num=1
Z=50 Ohm
Ref
TLOC
TL3
Z=50.0 Ohm
E=137.9
F=5 GHz
TLIN
TL1
Z=50.0 Ohm
E=146.2
F=5 GHz
S2P
1
2
SnP
SnP1
File="D:\f341433a.s2p"
TLIN
TL2
Z=50.0 Ohm
E=116.8
F=5 GHz
Ref
TLOC
TL4
Z=50 Ohm
E=159.3
F=5 GHz
Term
Term2
Num=2
Z=50 Ohm

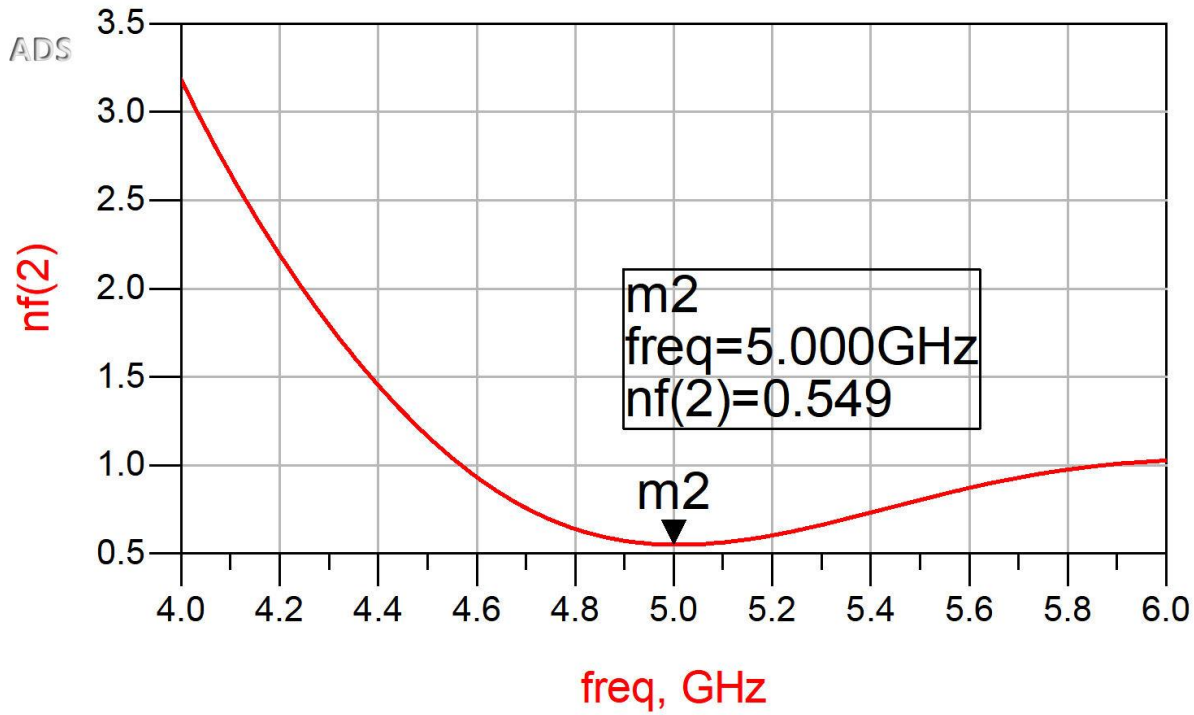
ADS
nf(2)
3.5
3.0
2.5
2.0
1.5
1.0
0.5
4.0
4.2
4.4
4.6
4.8
5.0
5.2
5.4
5.6
5.8
6.0
freq, GHz
m2
freq=5.000GHz
nf(2)=0.549
m2

Diagrama Smith, adaptare, $Z_L \neq Z_0$

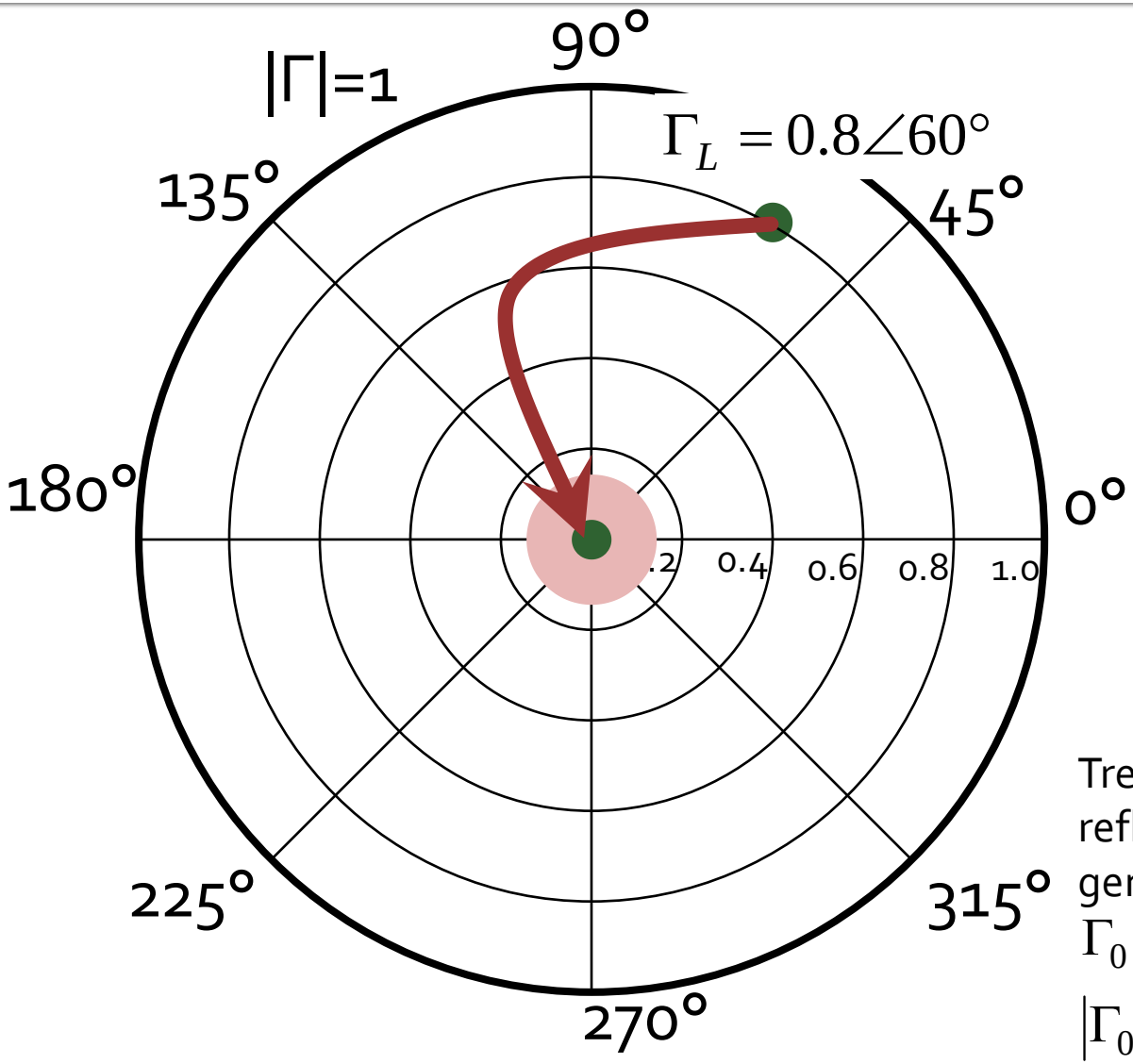

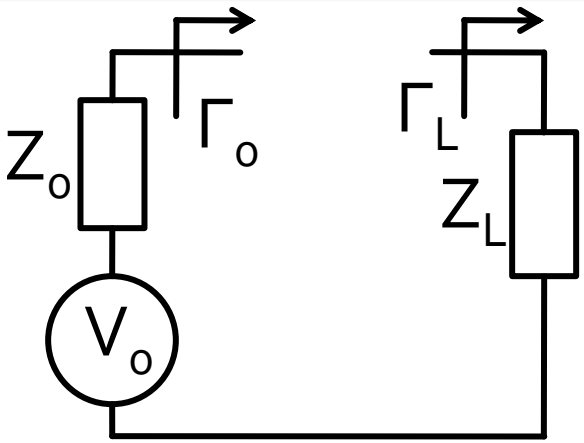

Adaptare Z_L la Z_0. Se raporteaza Z_L la Z_0

$$Z_L = 21.429\Omega + j \cdot 82.479\Omega$$

$$z_L = 0.429 + j \cdot 1.65$$

$$\Gamma_L = 0.8\angle 60°$$

Trebuie sa deplasez coeficientul de reflexie in zona in care pentru generator cu Z_0 am:

$\Gamma_0 = 0$ adaptare perfecta

$|\Gamma_0| \leq \Gamma_m$ adaptare "suficienta"

Diagrama Smith, adaptare, $Z_L=Z_o$

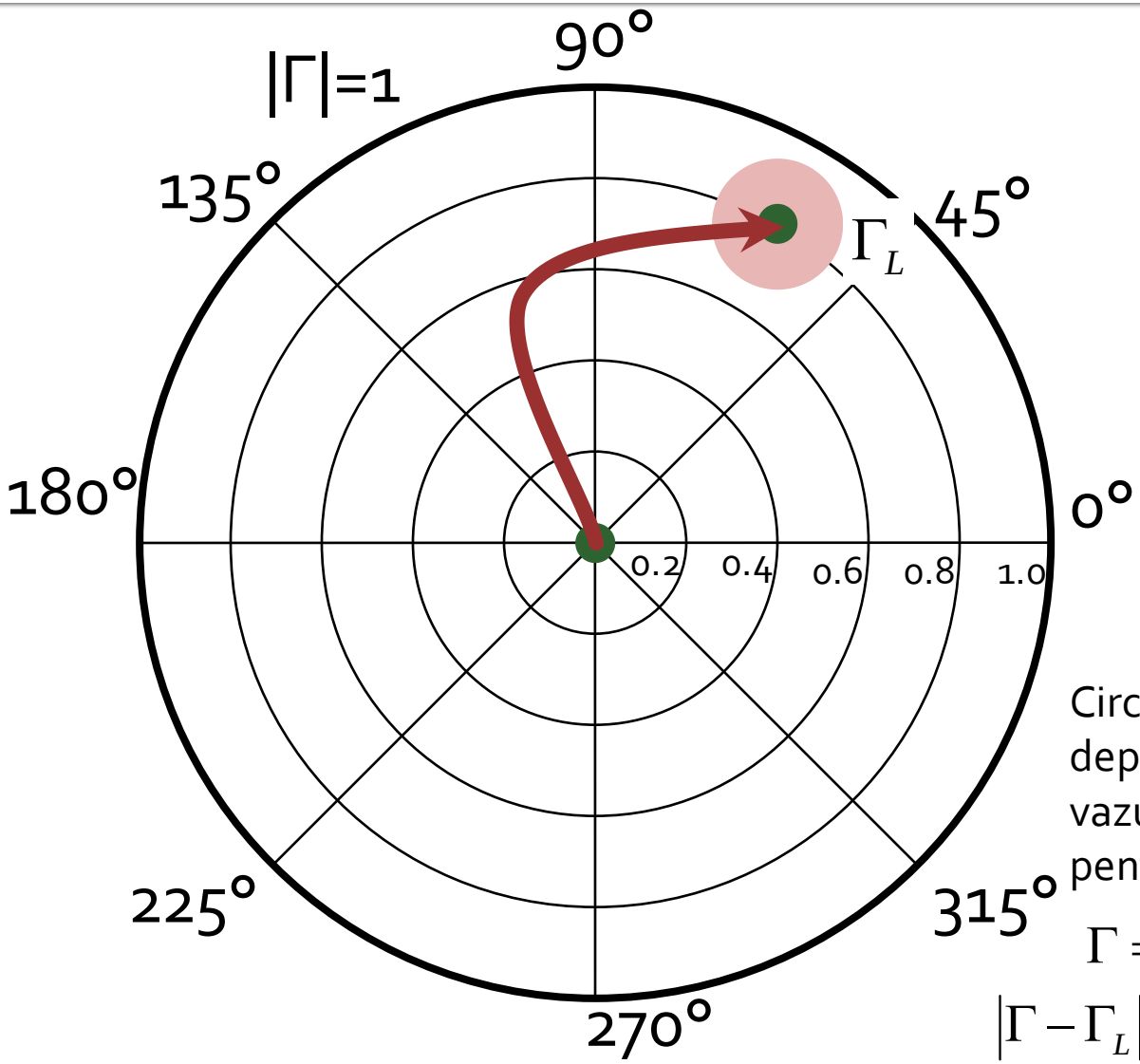

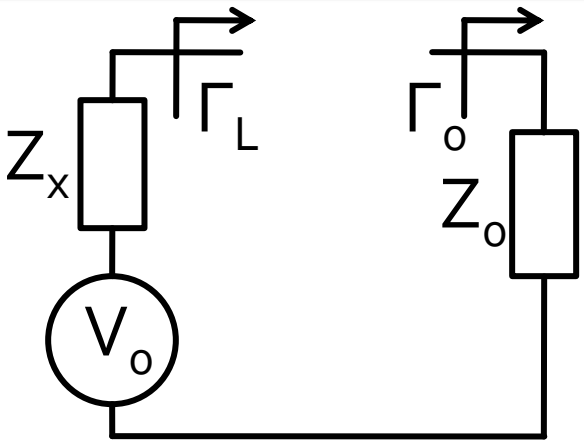

Sursa (de ex. tranzitorul) cu Z_X are nevoie de un anumit coeficient de reflexie Γ_L pentru a functiona corect

Circuitul de adaptare trebuie sa deplaseze coeficientul de reflexie vazut spre sarcina in zona in care pentru sarcina Z_o (Γ_o=0) am:

$\Gamma = \Gamma_L$ adaptare perfecta

$|\Gamma - \Gamma_L| \leq \Gamma_m$ adaptare "suficienta"

Diagrama Smith, adaptare, $Z_L=Z_0$

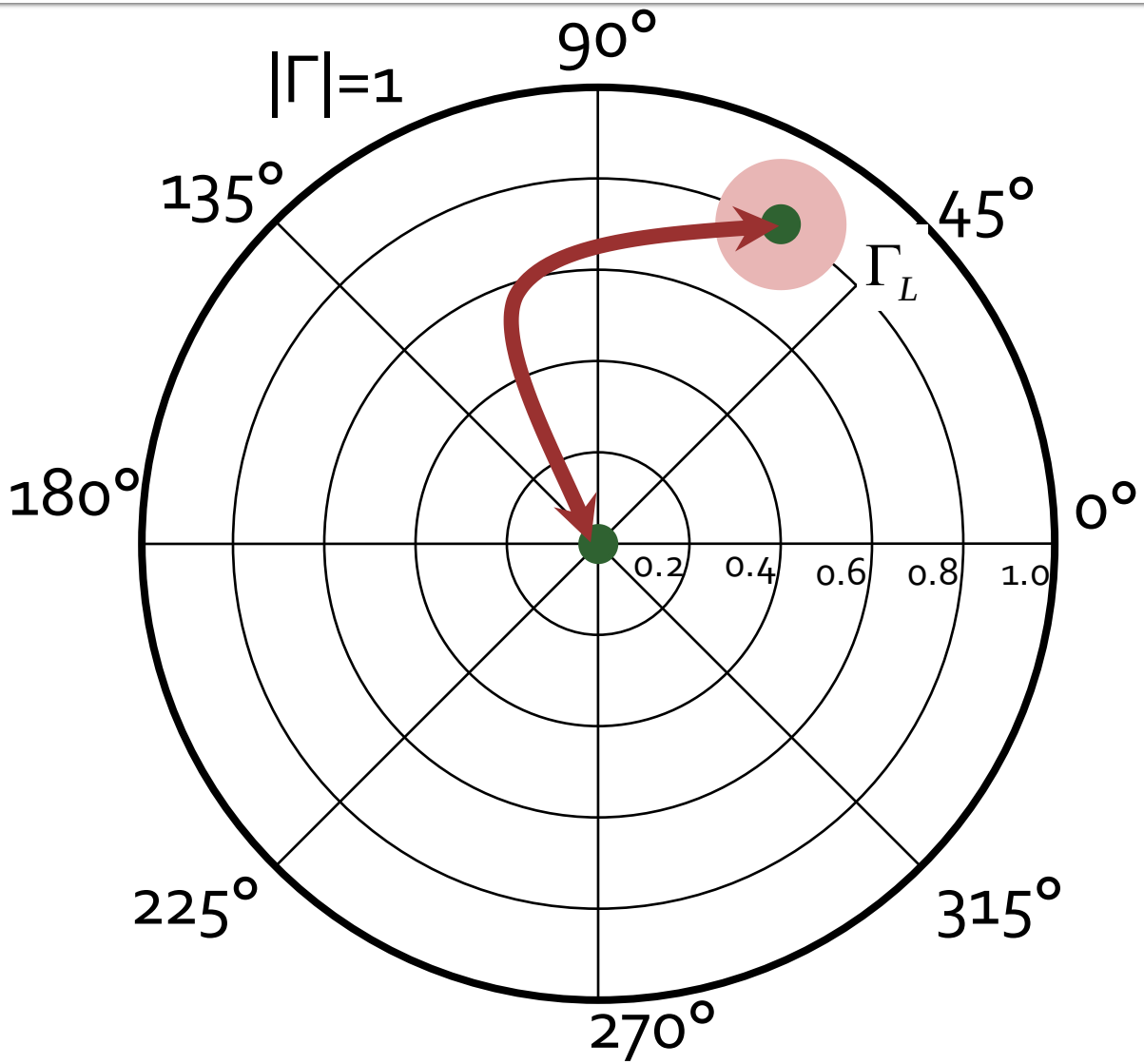

- Circuitele de adaptare care muta
  - Γ_L in Γ_0
  - Γ_0 in Γ_L
- sunt **identice** ca realizare. Difera doar prin **ordinea** in care se introduc elementele in circuitul de adaptare
- Ca urmare se pot folosi in proiectarea circuitelor de adaptare aceleasi:
  - **metode**
  - **relatii**

Contact

- Laboratorul de microunde si optoelectronica
- http://rf-opto.etti.tuiasi.ro
- rdamian@etti.tuiasi.ro